HW93300 SERIES - MANUAL OR AIR

25 Ton Shop Press

- Frames made in the USA

Made in USA

- Excellent for bending, bonding, or straightening applications
- Ideal for the removal or installation of gears, universal joints, pulleys, wrist pins, and other press jobs
- Industrial grade hydraulics

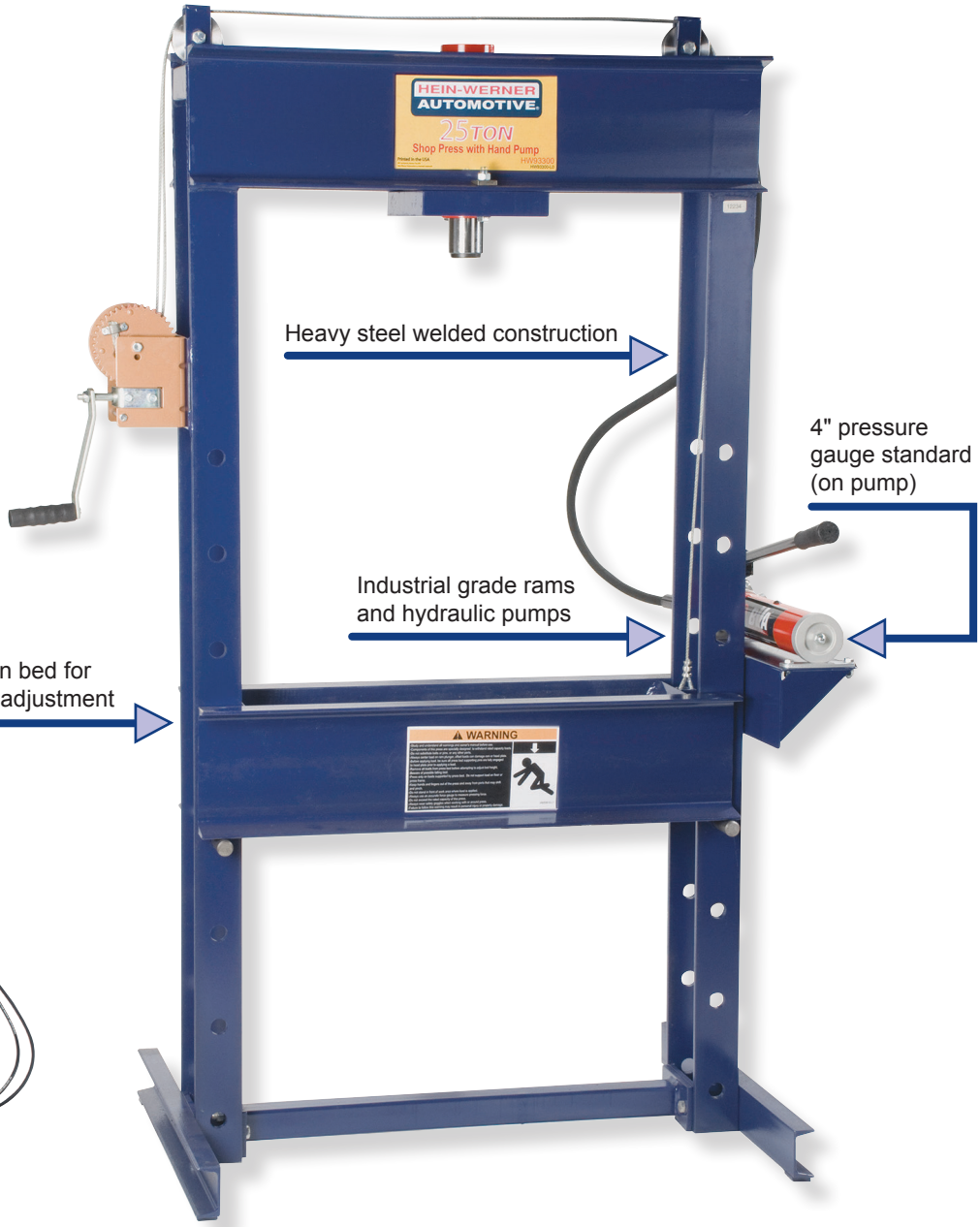

Optional Shop Press Guard
HW93325

Model	Capacity	Stroke	Pump Type	Press Size (H x W x L)	Interior Width	Bed Depth	Bed Position	Channel Width	Working Height	G.W.
HW93300	25 Ton	6″	Manual	71 x 44 x 30	29-3/4″	11-1/2″	8	6-3/4"	5-1/2″ ~ 47-1/2″	484 Lbs.
HW93301			Air							487 Lbs.
HW93305			Manual							510 Lbs.
HW93306			Electric							510 Lbs.

HW93400 SERIES - MANUAL, AIR OR ELECTRIC

55 Ton Shop Press

- Frames made in the USA

Made in USA

- Excellent for bending, bonding, or straightening applications
- Ideal for the removal or installation of gears, universal joints, pulleys, wrist pins, and other press jobs
- Industrial grade hydraulics

Optional Shop Press Guard
HW93425

Model	Capacity	Stroke	Pump Type	Press Size (H x W x L)	Interior Width	Bed Depth	Bed Position	Channel Width	Working Height	G.W.
HW93400	55 Ton	6″	Manual	80-1/2″ x 53″ x 30″	35-1/2″	14-7/8″	9	9-1/4"	7-1/2″ ~ 55-1/2″	855 Lbs.
HW93401			Air							850 Lbs.
HW93402			Electric							916 Lbs.
HW93403		13″	Air							891 Lbs.
HW93404			Electric							948 Lbs.

HW93410 SERIES - MANUAL, AIR OR ELECTRIC

55 Ton Rolling Head Shop Press

- Frames made in the USA

Made in USA

- Excellent for bending, bonding, or straightening applications
- Ideal for the removal or installation of gears, universal joints, pulleys, wrist pins, and other press jobs
- Industrial grade hydraulics

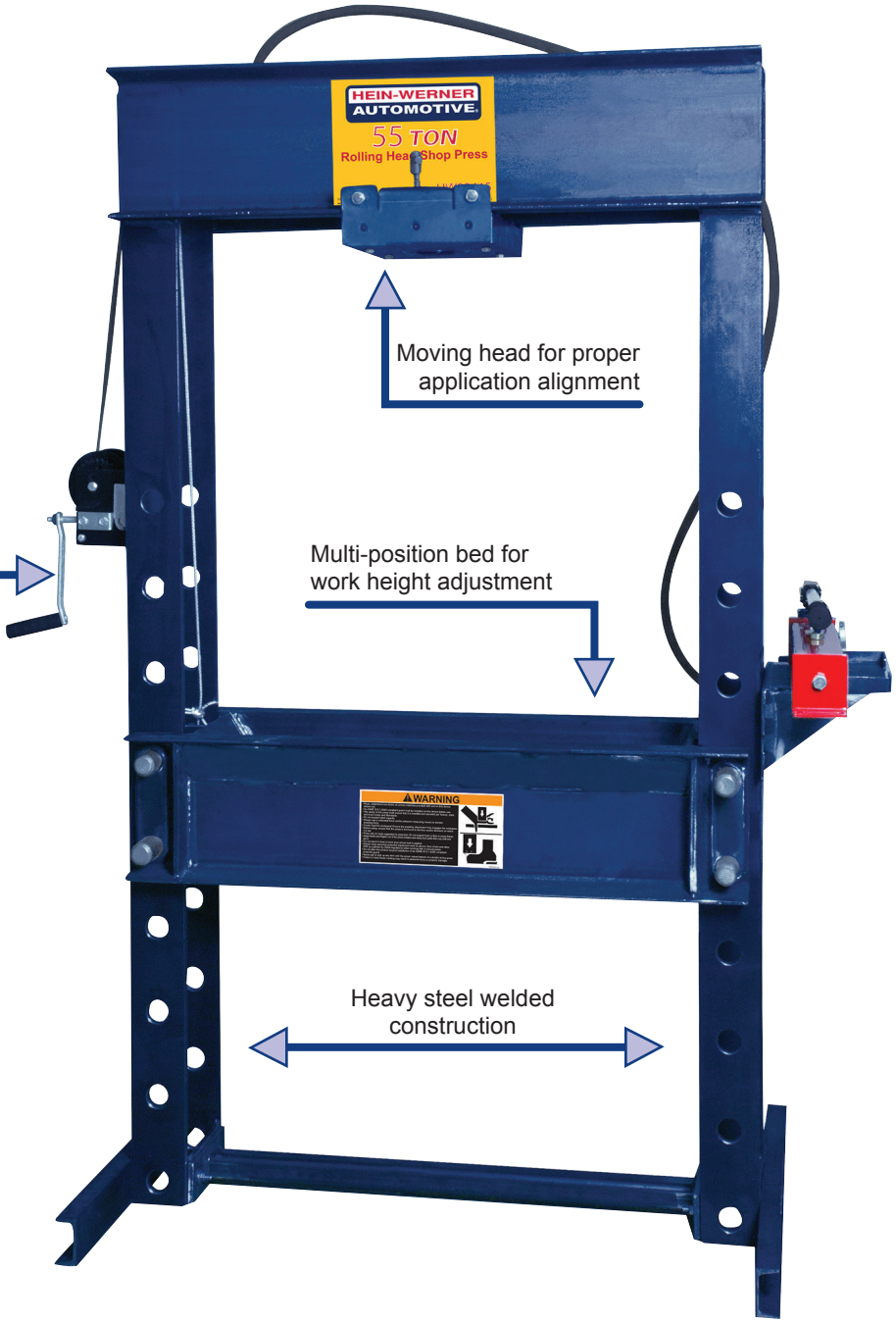

Optional Shop Press Guard
HW93425

Model	Capacity	Stroke	Pump Type	Press Size (H x W x L)	Interior Width	Bed Depth	Bed Position	Channel Width	Working Height	G.W.
HW93410	55 Ton	6″	Manual	80-1/2″ x 53″ x 30″	35-1/2″	14-7/8″	9	9-1/4"	15-3/8″ ~ 51-3/8″	855 Lbs.
HW93411			Air							850 Lbs.
HW93412			Electric							916 Lbs.
HW93413		13″	Air							891 Lbs.
HW93414			Electric							948 Lbs.
HW93415 (Double Acting)			Electric							948 Lbs.

HW93405 DOUBLE ACTING 55 Ton Shop Press

- Frames made in the USA

Made in USA

- Excellent for bending, bonding, or straightening applications
- Ideal for the removal or installation of gears, universal joints, pulleys, wrist pins, and other press jobs
- Industrial grade hydraulics

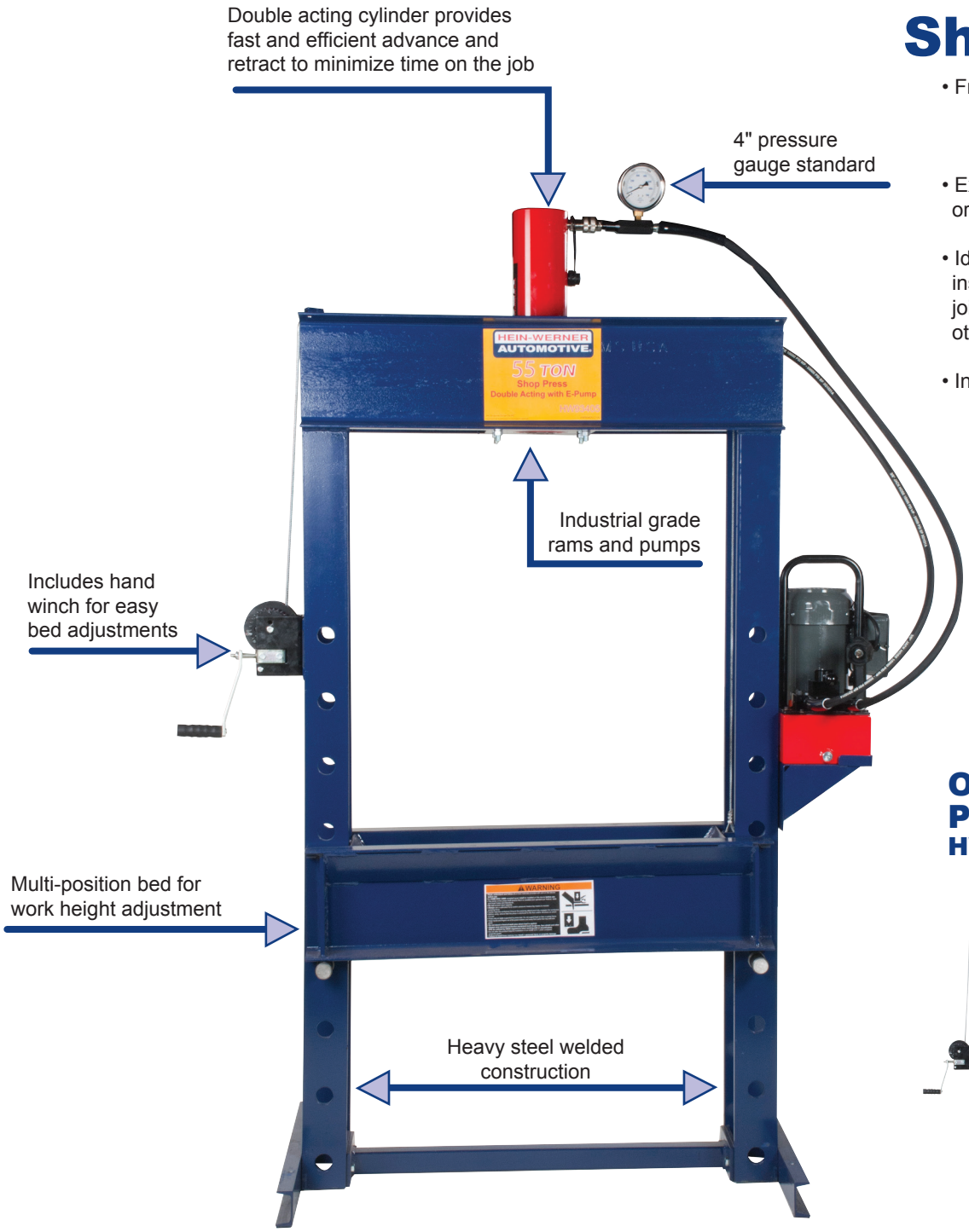

Optional Shop Press Guard HW93425

Model	Capacity	Stroke	Pump Type	Press Size (H x W x L)	Interior Width	Bed Depth	Bed Position	Channel Width	Working Height	G.W.
HW93405	55 Ton	13"	Electric	80-1/2" x 53" x 30"	35-1/2"	14-7/8"	9	9-1/4"	7-1/2"~55-1/2"	968 Lbs.

HW93610 Series

100 Ton Shop Press

- Frames made in the USA

Made in USA

- Excellent for bending, bonding, or straightening applications

- Ideal for the removal or installation of gears, universal joints, pulleys, wrist pins, and other press jobs

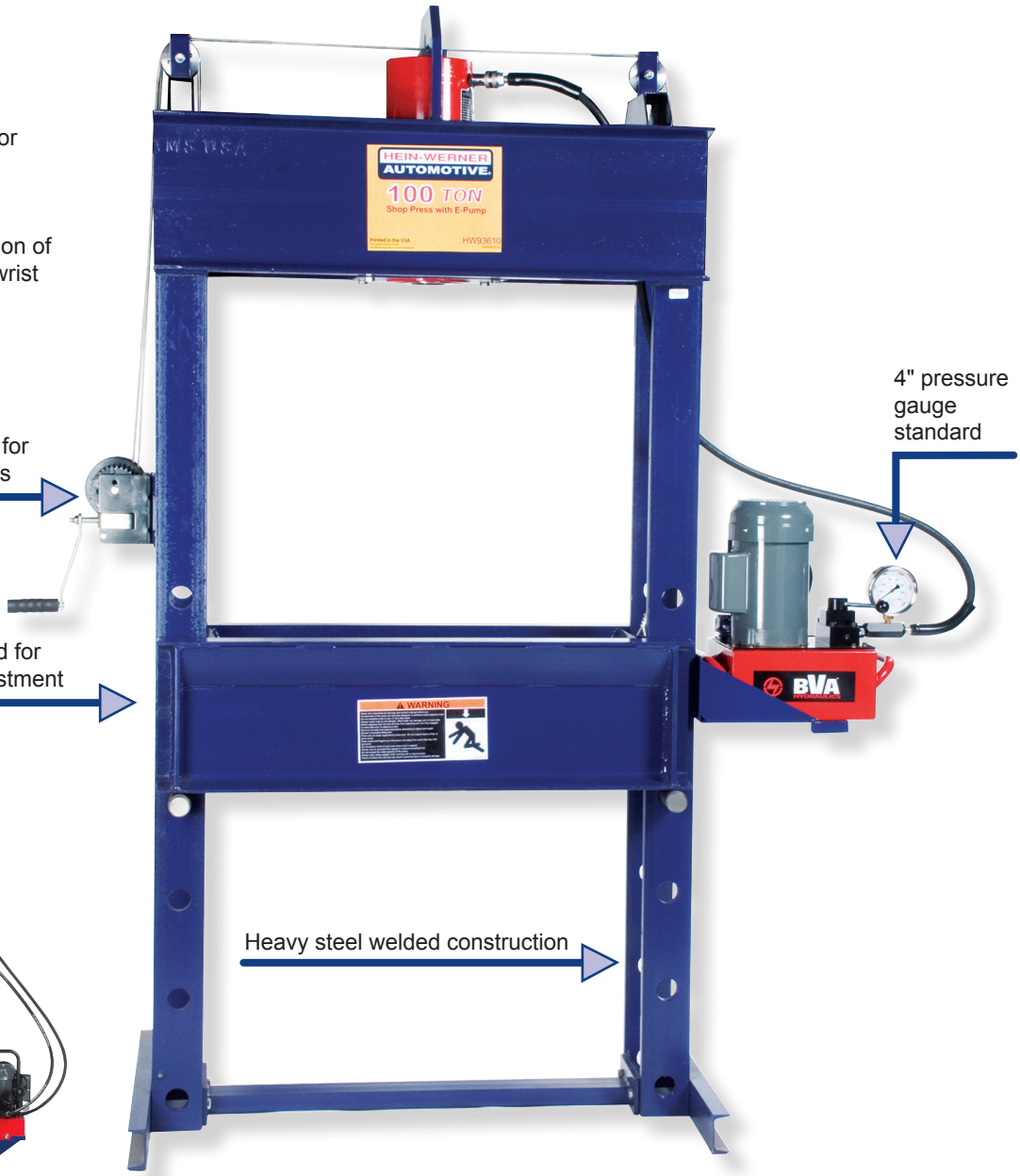

Optional Shop Press Guard

HW93625

Model	Capacity	Stroke	Pump Type	Press Size (H x W x L)	Interior Width	Bed Depth	Bed Position	Channel Width	Working Height	G.W.
HW93610	100 Ton	10″	Electric	89″ x 63″ x 30″	35-3/8″	16-1/4″	6	10-1/4	12″ ~ 52″	1,221 Lbs.
HW93615							6	10		770 Lbs.

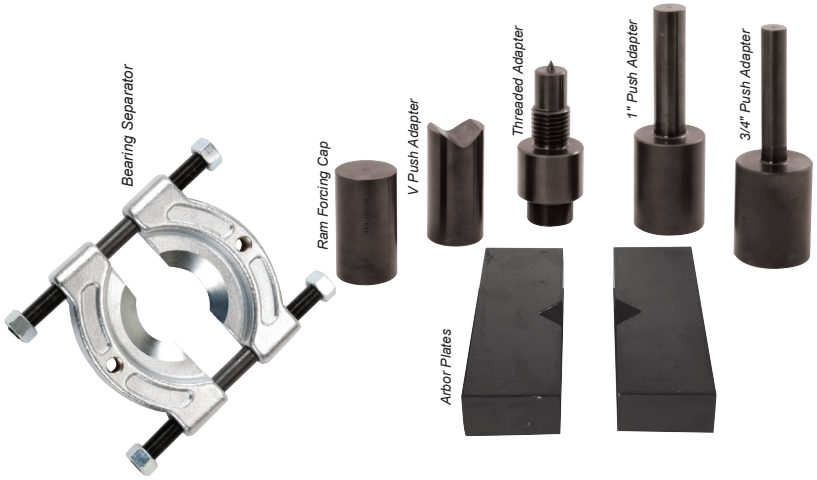

HW93309
25 Ton Shop Press Accessories Kit

Made in USA

Accessories kit contains
- Ram forcing cap (300-002-229)
- V push adapter (300-002-807)
- Threaded adapter (300-002-953)
- 1″ push adapter (300-002-511)
- 3/4″ push adapter (300-002-510)
- Arbor plates (AP25)
- Bearing Separators
- G.W. 38 Lbs..

HW93409
55 Ton Shop Press Accessories Kit

Made in USA

Accessories kit contains
- Ram forcing cap (400-002-230)
- V Push adapter (400-002-808)
- Threaded adapter (400-002-368)
- 1-1/2″ push adapter (400-002-757)
- 1-1/4″ push adapter (400-002-756)
- Arbor plates (AP55)
- Bearing Separators
- G.W. 79 Lbs..

HW93291
1 Quart Premium Jack Oil

HW93294
1 Gallon Premium Jack Oil

Model Number	Volume	Viscosity Index	Viscosity @ 100°F (S.U.S.)	Viscosity @ 210°F (S.U.S.)	ISO Grade	Flash Point	Pour Point	API Gravity
HW93291	1 Quart	93 min.	65	35	10	405 °F	-59 °F	25.5
HW93294	1 Gallon							