Electric Pump Instruction Manual

MODELS: PE60S3L06J, PE60S3L10J, PE60S3L40J, PE60S4L06J, PE60S4L10J, PE60S4L40J

SFA Companies 10939 N. Pomona Ave. Kansas City, MO 64153
Tel: 888-332-6419 * Fax: 816-448-2142
E-mail: sales@bvahydraulics.com Website: www.bvahydraulics.com

Maximum Operating Pressure 10,000 PSI

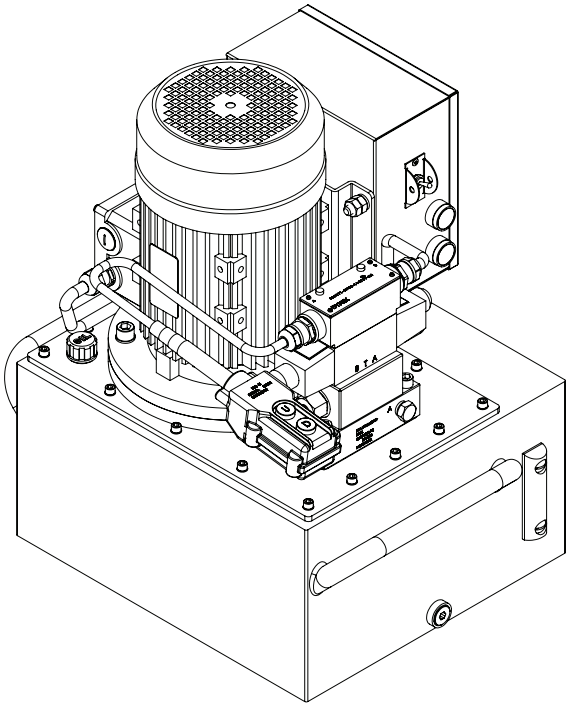

PE60S3L06J Shown

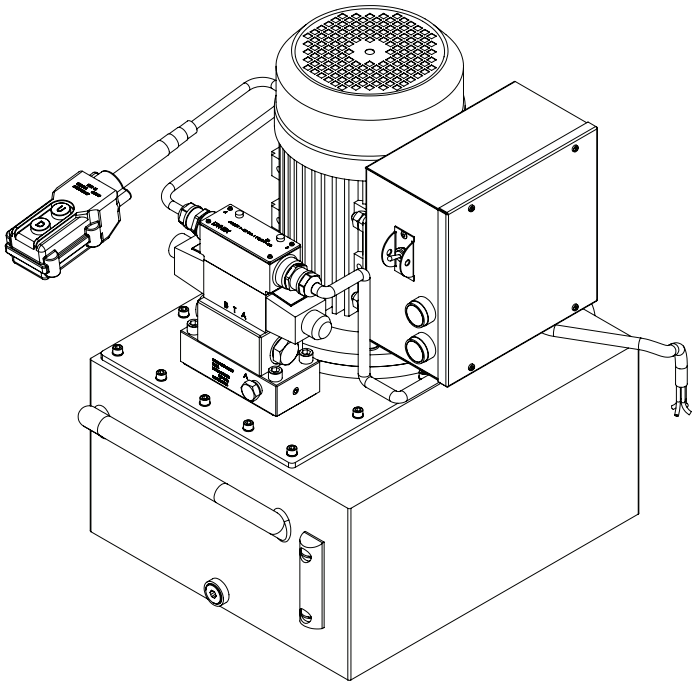

PE60S4L06J Shown

This is the safety alert symbol. It is used to alert you to potential personal injury hazards. Obey all safety messages that follow this symbol to avoid possible injury or death.

Printed in Taiwan

SAFETY AND GENERAL INFORMATION

Save these instructions. For your safety, read and understand the information contained within. The owner and operator shall have an understanding of this product and safe operating procedures before attempting to use this product. Instructions and safety information shall be conveyed in operator's native language before use of this product is authorized. Make certain that the operator thoroughly understands the inherent dangers associated with the use and misuse of the product. If any doubt exists as to the safe and proper use of this product as outlined in this factory authorized manual, remove from service immediately.

Inspect before each use. It is recommended that, prior to each use, an inspection be done by qualified personnel and that any missing or damaged parts, decals, warning / safety labels or signs be replaced with factory authorized replacement parts only. Any pump that appears to be damaged in any way, is worn, leaking or operates abnormally shall be removed from service immediately until such time as repairs can be made. Any pump that has been subjected to a shock load (a load dropped suddenly, causing the system pressure to exceed 10,000 PSI), shall be removed from service immediately until checked by qualified personnel. Owners and operators of this equipment shall be aware that the use and subsequent repair of this equipment does require special training and knowledge.

PRODUCT DESCRIPTION

This Pump is engineered to meet most industrial standards for Performance and Safety. Its allows quick displacement of hydraulic fluid under no load conditions and easy pumping in loaded conditions. This electric hydraulic pump supplies compressed hydraulic fluid to compatible **single acting applications ONLY.** Such applications include rams, presses, spreaders, compactors and crimping machines, anywhere that 10,000 PSI of single acting fluid pressure is needed. Special skill, knowledge and training may be required for a specific task and the product may not be suitable for all the jobs described above. Unsuitable applications would include applications that call for a device to move, level or support persons, animals, hazardous materials, mobile homes/dwellings in general, mirrors and/or plate glass, and/or to connect/secure hatches, components, etc. between bulkheads. The user must make the decision regarding suitability of the product for any given task and assume the responsibility of safety for himself/herself and others in the work area.

⚠DANGER

TO AVOID ELECTROCUTION HAZARD:

- Owner, Operator must read, understand and follow all printed material provided with this device before use.
- Connect ONLY to properly grounded electrical source. Connect to GFI outlet ONLY! For use in dry locations.
- Avoid the use of extension cords. If necessary, for extension cords lengths up to 25 ft, use SJT-14X3 or heavier. For cords up to 50 ft, use SJT-12X3 or heavier. For extension cord lengths up to 100 ft, use SJT-10X3 or heavier NEVER use a 3 prong adapter.
- Do not operate this device in an explosive atmosphere or in the presence of conductive liquids.

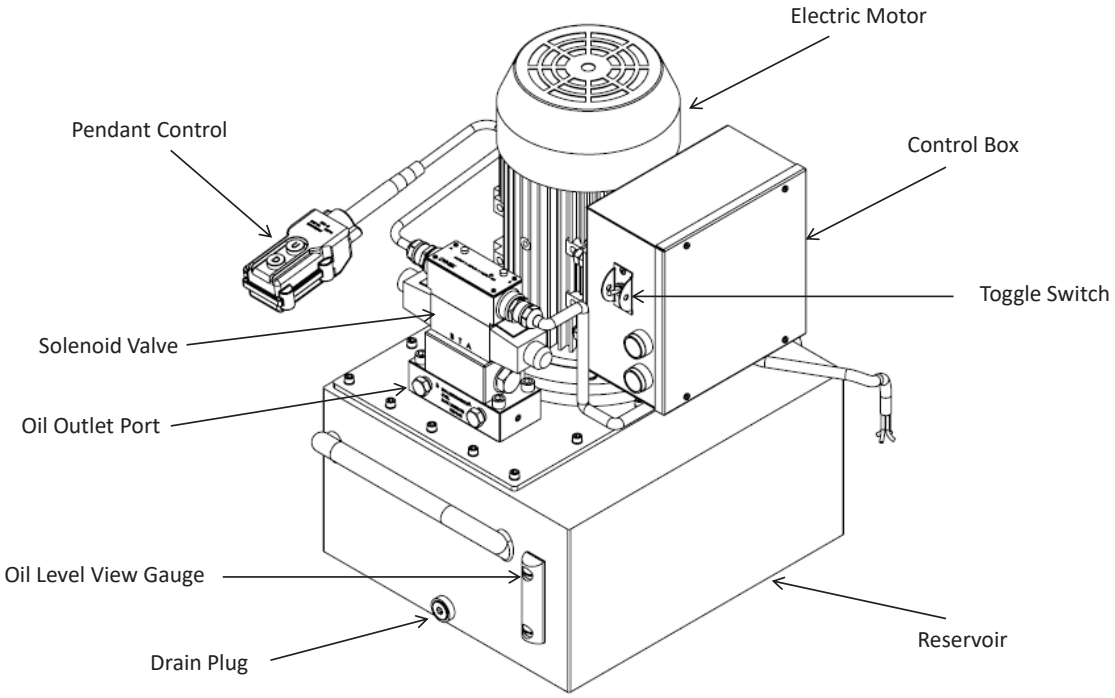

Figure 1 – Typical 4-way/3-position PE60 Series with Solenoid Valve

SPECIFICATIONS

Model No.	Usable Oil Capacity (Gal.)	Pressure Setting (PSI)		Output Flow Rate (Cu. In/Min.)		Cylinder Type	Valve Type	Valve Function	Motor	Motor Voltage (V)
		1st Stage	2nd Stage	1st Stage	2nd Stage					
PE60S3L06J	6	700	10,000	525	122	Single Acting	Solenoid Control	Hold / Run / Retract	3 HP / 3 Phase	460 - 480 VAC
PE60S3L10J	10									
PE60S3L40J	40									
PE60S4L06J	6					Double Acting				
PE60S4L10J	10									
PE60S4L40J	40									

⚠WARNING

- Read, understand, and follow all instructions provided with and on this device before use.
- All WARNING statements must be carefully observed to help prevent personal injury.
- No alteration shall be made to this device.

- Always wear protective gear when operating hydraulic equipment. Tie up long hair, wear eye and ear protection, and non slip foot wear.

- Keep hydraulic equipment away from flames and heat. Hydraulic fluid can ignite and burn. Do not operate if leaks are detected.

- Crush Hazard. Keep hands and feet away from loading area. Avoid pinch points or crush points that can be created by the load, cylinder, or system components.

- To avoid crushing and related injuries: NEVER work on, under or around a lifted load before it is supported by appropriate mechanical means. Never rely on hydraulic pressure alone to support load.

HYDRAULIC PUMPS

- The user must be a qualified operator familiar with the correct operation, maintenance, and use of pumps. Lack of knowledge in any of these areas can lead to personal injury.
- Do not exceed rated capacity of the pump or any equipment in the system.
- Never attempt to lift a load weighing more than the capacity of the output device (cylinder, spreader etc.)
- Do not subject pump and its components to shock loads.
- Burst hazard exists if hose or connection pressure exceeds rated pressure.
- Inspect pump, cylinder, hoses and connections before each use to prevent unsafe conditions from developing. Do not use if they are damaged, altered or in poor condition. Do not operate the system with bent or damaged coupler or damaged threads.
- Never hold or stand directly in line with any hydraulic connections while pressurizing.
- ALWAYS use gauge or other load measuring instrument to verify load.
- Never attempt to disconnect hydraulic connections under pressure. Release all line pressure before disconnecting hoses.
- Use of incorrect power source will damage the motor.
- Do not use an ungrounded (two-prong) extension cord.
- Do not install, remove or rewire the motor with power applied. Have qualified technician to install, adjust and service the motor.
- Do not operate this device in an extreme temperature, explosive atmosphere or in the presence of conductive liquids.
- Always inspect hoses and connections for damage prior to use.
- Ensure the device is placed on a hard, level surface.
- Ensure that application is stable to work on and around.
- Use only approved accessories and approved hydraulic fluid.
- Never attach ANY component not authorized by manufacturer.
- Do not connect to application which can return more oil to the reservoir than the pump reservoir can hold.
- Do not connect pump to hydraulic system powered by another pump.
- This device is not suitable for use as support device! As the system load is lifted, use blocking and cribbing to guard against a falling load.
- All personnel must be clear before lowering load or depressurizing the system.
- Never try to disassemble a hydraulic pump, refer repairs to qualified, authorized personnel.

HYDRAULIC HOSES & FLUID TRANSMISSION LINES

- Avoid short runs of straight line tubing. Straight line runs do not provide for expansion and contraction due to pressure and/or temperature changes.
- Reduce stress in tube lines. Long tubing runs should be supported by brackets or clips. Before operating the pump, tighten all hose connections with proper tools. Do not overtighten. Connections should only be tightened securely and leak-free. Overtightening can cause premature thread failure or high pressure fittings to burst.
- Should a hydraulic hose ever rupture, burst or need to be disconnected, immediately shut off the pump and release all pressure. Never attempt to grasp a leaking pressurized hose with your hands. The force of escaping hydraulic fluid can inflict injury.
- Do not subject the hose to potential hazard such as fire, sharp objects, extreme heat or cold, or heavy impact.
- Do not allow the hose to kink, twist, curl, crush, cut or bend so tightly that the fluid flow within the hose is blocked or reduced. Periodically inspect the hose for wear.
- Do not pull, position or move setup by the hose.
- Hose material and coupler seals must be compatible with hydraulic fluid used. Hoses also must not come in contact with corrosive materials such as battery acid, creosote-impregnated objects and wet paint. Never paint a coupler or hose.
- FAILURE TO HEED THESE WARNINGS MAY RESULT IN PERSONAL INJURY AS WELL AS PROPERTY DAMAGE.

BEFORE USE

Read, understand, and follow **all** printed materials carefully before attempting to assemble or operate these pumps.

NOTICE: *E-Pumps are shipped dry. Add oil before use.*

Electrical Connections:
Compare motor nameplate against power availability to prevent motor burnout and dangerous electrical overloading. The motors are wired for 460 - 480V volts unless otherwise specified.

⚠ **DANGER:** *Motor, connections and remote on/off switch are energized components containing line voltage. Ensure supply is grounded and GFI protected.*

Hydraulic Connections:

1. Make sure to use the hydraulic oil specified by the manufacturer. Ensure oil level in reservoir is ~ **2"** from top of reservoir plate, with cylinders retracted and motor off.
2. Use of pressure gauge is strongly recommended. Attach a pressure gauge between the pump and cylinder to monitor pressure on cylinder.
3. Make sure coupler, hose, valve, gauge are tighten securely to prevent accidental removal of components while in use. Hoses **must** not be kinked or twisted.

NOTICE: *Always secure threaded port connections with non-hardening pipe thread compound. Take care not to introduce compound into port orifices.*

To ensure smooth operation, bleed air from the system by fully advancing and retracting the cylinder several times.

4. Do not exceed the rated capacity of the equipment connected to the pump. Ensure that **all hydraulic equipment used with this pump is rated at 10,000 psi or greater**.

OPERATION

⚠ **WARNING:** *ALWAYS monitor pressure, force and load position. Pressure may be monitored by means of an optional manifold and gauge. Force may be monitored by means of a load cell and digital indicator. Correct application position can only be determined by the operator of the equipment.*

1. Check oil level, add oil if necessary.
2. Make sure system fittings and connections are tight and leak free.
3. Place control valve lever in the middle (Neutral/Hold) position to prevent accidental lifting or moving of load.
4. To **start** the motor: Toggle the ON/OFF switch located on the control box to 'ON' position **OR** for momentary use: Leave control box switch in the 'OFF' position and toggle remote ON/OFF pendant switch.
5. It is recommended to use to ON/OFF switch at the **control box** to let the pump idle for a few minutes before putting into operation.

⚠ **WARNING:** *This pump is for use with a single acting cylinder ONLY! Connect one hose from either pump oil output port to the input port of a single acting application such as a cylinder. Block the unused output port securely. This model can not be used with double acting cylinders.*

6. Use the control valve lever to control the direction of fluid flow. These pumps are equipped with a 3-way 3-position valve for use with single acting cylinder applications **ONLY**. Refer to Figure 3 below for the flow path.
7. Always monitor the pressure, load and position.
8. Do not exceed the rated capacity of the equipment connected to the pump. To **reduce** system component stress, material fatigue, and the risk of personal injury and property damage, **never** load a hydraulic application (cylinder, spreader, etc.) to more than 80% of its rated capacity.
9. Shift the control valve until the desired pressure, load or position is reached. **Note:** Do not continue to operate pump after cylinder plunger is fully extended or retracted.
10. To **turn off** the motor: Toggle the ON/OFF switch on the control box to 'OFF' position.
11. Depressurize all connections before disconnect. If you have any questions, call BVA Technical Service @ (888)-332-6419.

TROUBLESHOOTING

A system failure may or may not be the result of a pump malfunction. The following information is intended to be used as an aid in determining if a problem exists. Pumps should be repaired only be repaired by authorized BVA Service Center.

Symptom	Possible Causes	Corrective Action
Motor will not start	• No power or wrong voltage • Damaged power cord • Tripped circuit breaker • Loose or faulty wiring	• Check the power supply & voltage • Contact Customer Service • Ensure electrical supply is adequate • Contact Customer Service
Erratic cylinder action	• Air in system or pump cavitation • External leak • Internal hydraulic leak	• Follow pump instructions for bleeding air • Tighten all connections • Contact Service Center
Pump fails to maintain pressure	• External leak • Internal hydraulic leak • Pump or valve malfunction	• Tighten all connections • Contact Service Center
Cylinder extends partially	• Hydraulic oil level too low in pump • Load is above the capacity of system • Cylinder is sticking or binding	• Fill and bleed the system • Use the correct equipment • Contact Service Center
Cylinder moves slower than normal	• Loose connection or coupler • Restricted hydraulic line or fitting • Pump not working correctly • Cylinder seals leaking	• Tighten • Clean and replace if damaged • Check pump operating instructions • Replace cylinder
Cylinder leaks hydraulic fluid	• Worn or damaged seals	• Replace cylinder
Cylinder will not retract or retracts slower than normal	• Loose couplers • Weak or broken retraction springs • Cylinder damaged internally • Pump reservoir too full	• Tighten couplers • Replace cylinder • Replace cylinder • Drain hydraulic fluid to correct level
Motor cuts out	• Extension cord too long • Faulty motor • Overheated motor trips circuit breaker	• Replace • Replace or repair • Allow motor to cool, reset circuit breaker

MAINTENANCE

1. Keep areas around pump unobstructed in order to provide good air flow around the motor and pump. Try keep the motor and pump as clean as possible.
2. Inspect hoses and connections daily. Replace damaged components immediately with BVA Hydraulics replacement parts only.
3. Tighten connections as needed. Use non-hardening pipe thread compound when servicing connections.
4. Check hydraulic oil level every 40 hours of operation. Add hydraulic oil if necessary.
5. Completely change the hydraulic oil every 300 hours of operation. Change the oil more frequently when pump is used in an extremely dusty environment or when the oil has been overheated. Use only good quality hydraulic oil. We recommend BVA hydraulic oil FJZ01 or equivalent. To order the oil, refer to service parts section. Use **only** the manufacturers recommended hydraulic oil. **Use of other hydraulic oil may result in pump failure and will void warranty.**

Adding Hydraulic Oil

1. Make sure electric motor is OFF.
2. Depressurize and disconnect hydraulic hose from application.
3. Remove vent cap on the top plate of the reservoir.
4. Use a funnel to fill reservoir to about 2" from top of reservoir plate.
5. Wipe up any spilled fluid and reinstall the vent cap.

Changing Hydraulic Oil

1. For best results, change hydraulic oil once a year.
2. Remove drain plug, tilt the pump then pour used fluid into a sealable container.
3. Dispose the hydraulic oil in accordance with local regulations.
4. Fill hydraulic oil, then reinstall vent cap.

Cleaning

Clean oil filter screen periodically with nonflammable solvent, then blow dry before reassemble back to pump.

Storage

1. When not in use, depressurize and disconnect hydraulic hoses from application.
2. Wipe clean, thoroughly.
3. Store in clean, dry environment. Avoid temperature extremes.
4. For transportation or long term storage, shield pump with a protective cover.

Electric Pumps Service Parts

MODELS: PE60S3L06J, PE60S3L10J, PE60S3L40J, PE60S4L06J, PE60S4L10J, PE60S4L40J

SFA Companies 10939 N. Pomona Ave. Kansas City, MO 64153
Tel: 888-332-6419 * Fax: 816-448-2142
E-mail: sales@bvahydraulics.com Website: www.bvahydraulics.com

Not all components of the pump are replacement items, but are illustrated as a convenient reference of location and position in the assembly sequence.

Parts List

Item	Part Number	Description	Qty
1	E35-4-9100-109	3 HP, 3 Phase Motor Assembly	1
2	E35-1-2000-102	3 HP Motor Pump Assembly	1
3	RES06-01	6 Gal. Reservoir Assembly	1
	RES10-01	10 Gal. Reservoir Assembly (not shown)	1
	RES40-01	40 Gal. Reservoir Assembly (not shown)	1
4	E05-3-9902-105	Hex Bolt & Washer Assembly - 16 pcs	1
5	C33L	3-Way/3-Position Control Valve - Locking	1
	C43L	4-Way/3-Position Control Valve - Locking	1
6	655011-24VDC	Solenoid Control Device - 24 VDC	1
7	E05-3-9990-108	Handheld Control Assembly	1

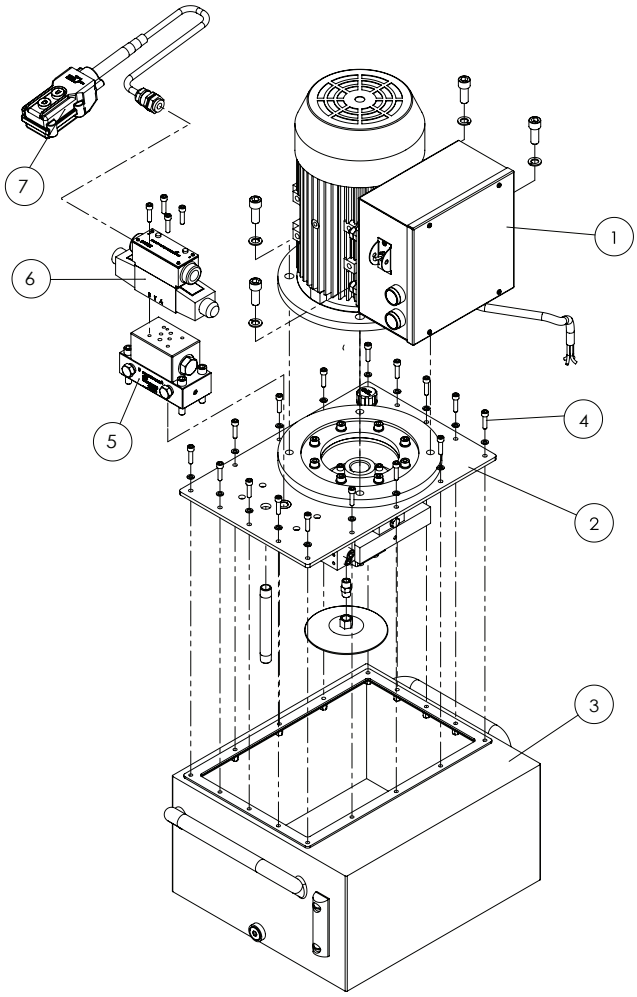

Electric Pumps
Pump Assembly

PART: E35-1-2000-102

SFA Companies 10939 N. Pomona Ave. Kansas City, MO 64153
Tel: 888-332-6419 * Fax: 816-448-2142
E-mail: sales@bvahydraulics.com Website: www.bvahydraulics.com

Not all components of the pump are replacement items, but are illustrated as a convenient reference of location and position in the assembly sequence.

Parts List

Item	Part Number	Description	Qty
1	649-1-0080-046	Bolt	8
2	605-3-0080-102	Gasket	8
3	N/A	Base Bracket	1
4	E08-4-2000-107	Oil Vent Cap	1
5	N/A	Reservoir Cover	1
6	N/A	Motor Mount	1
7	N/A	Shaft Adaptor	1
8	E60-6-9002-100	Key	1
9	N/A	Upper Plate Assy.	1
10	649-1-0095-204	Screw	4
11	N/A	Eccentric 5/8 Shaft	1
12	622-6-0318-203	Bearing Needle	1
13	E05-6-9007-107	Sleeve Eccentric Bearing	1
14	E30-4-4000-105 *see page 9 for details*	Piston Block Assy.	4
15	511-7-0064-109	O-Ring	2
16	N/A	Lower Plate Assy.	1
17	649-1-0063-403	Screw	8
18	E15-4-6030-103 *see page 10 for details*	Gear Pump Assy.	1
19	N/A	Adaptor Assy.	1
20	649-1-0095-507	Bolt	4
21	N/A	Base	2
22	E05-4-8000-106 *see page 11 for details*	Safety Valve Set	1

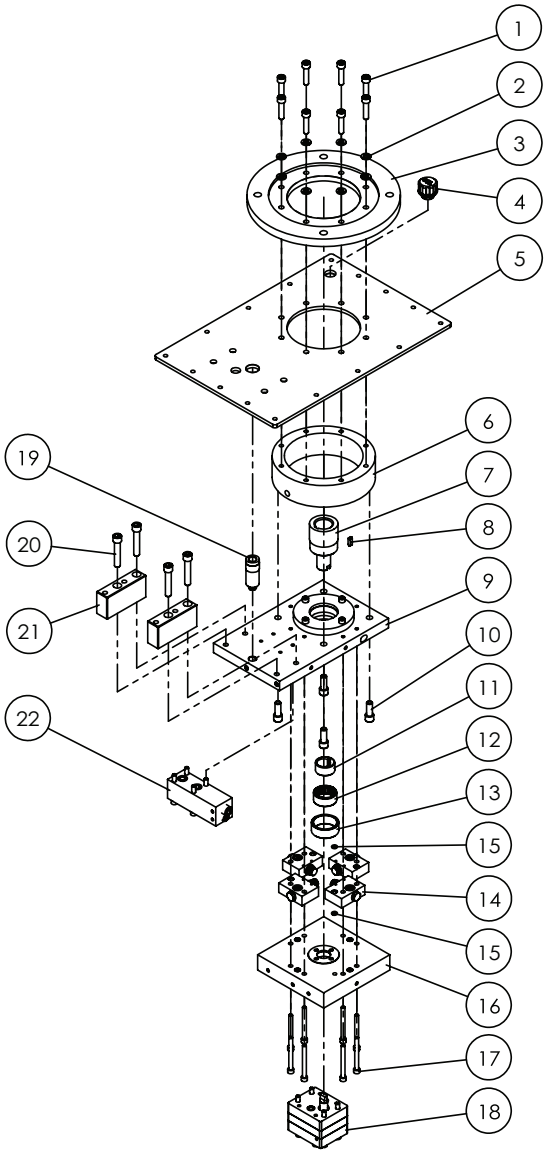

Electric Pumps
Pump Piston Set

PART: E30-4-4000-105

SFA Companies 10939 N. Pomona Ave. Kansas City, MO 64153
Tel: 888-332-6419 * Fax: 816-448-2142
E-mail: sales@bvahydraulics.com Website: www.bvahydraulics.com

Not all components of the pump are replacement items, but are illustrated as a convenient reference of location and position in the assembly sequence.

Parts List

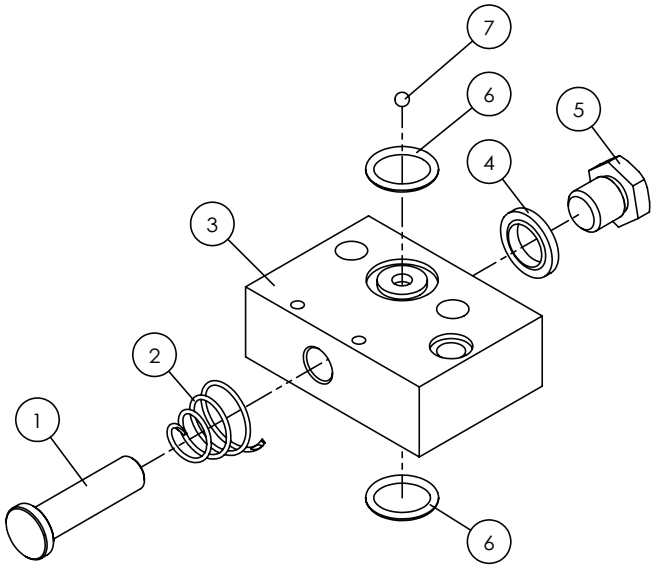

Item	Part Number	Description	Qty
1	E30-6-4000-107	Piston	1
2	*	Spring	1
3	N/A	Piston Block	1
4	H18-6-8103-104	Washer	1
5	E05-6-4002-102	Hex Head Plug	1
6	*	O-Ring	2
7	*	Ball	1
8	*	O-Ring	2
*	E15-3-9940-101	Piston Block Assembly Repair Kit	1

Electric Pumps
Gear Pump Assembly

PART: E15-4-6030-103

SFA Companies 10939 N. Pomona Ave. Kansas City, MO 64153
Tel: 888-332-6419 * Fax: 816-448-2142
E-mail: sales@bvahydraulics.com Website: www.bvahydraulics.com

Not all components of the pump are replacement items, but are illustrated as a convenient reference of location and position in the assembly sequence.

Parts List

Item	Part Number	Description	Qty
1	*	O-Ring	2
2	N/A	Uper Gear Plate Assy.	1
3	*	Retaining Ring-External	4
4	E15-6-6002-100	Drive Shaft-Gear Pump	1
5	E15-6-6003-102	Idler Shaft-Gear Pump	1
6	*	Key	2
7	E15-6-6004-104	Gear	2
8	*	Pin Dowel	2
9	N/A	Center Gear Plate	1
10	N/A	Lower Gear Plate Assy.	1
11	433-6-2401-106	Parker Hex Plug	1
12	649-1-0063-302	Hex Bolt	4
13	649-1-0063-403	Hex Bolt	4
*	E15-3-9960-107	Gear Pump Assembly Repair Kit	1

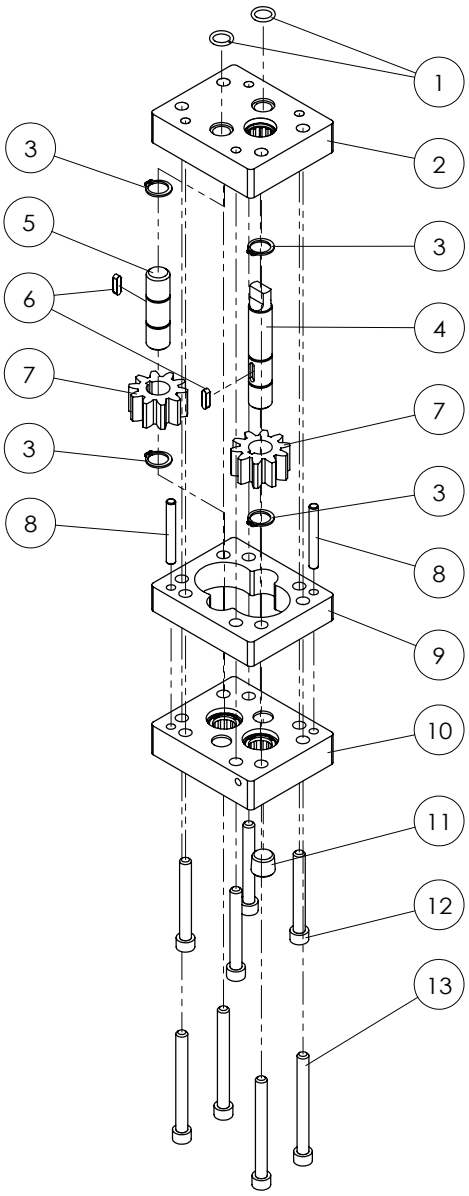

Electric Pumps Safety Valve Set

PART: E05-4-8000-106

SFA Companies 10939 N. Pomona Ave. Kansas City, MO 64153
Tel: 888-332-6419 * Fax: 816-448-2142
E-mail: sales@bvahydraulics.com Website: www.bvahydraulics.com

Not all components of the pump are replacement items, but are illustrated as a convenient reference of location and position in the assembly sequence.

Parts List

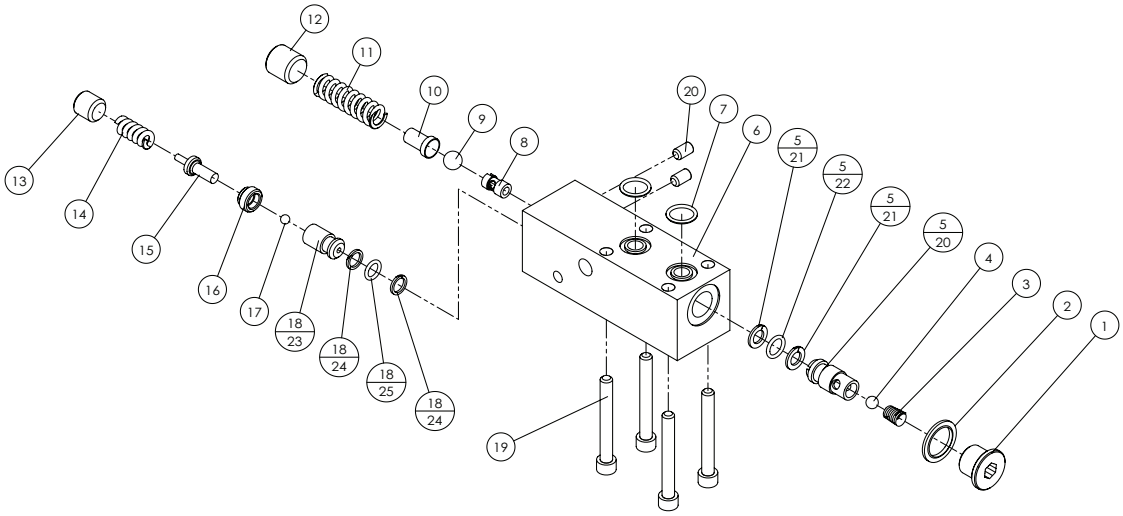

Item	Part Number	Description	Qty
1	E05-6-8008-104	Parker Hex Plug	1
2	*	Metal Seal	1
3	*	Tapered Spring	1
4	601-7-0008-009	Chrome Steel Balls 1/4"	1
5	E05-4-8002-100	Stick Valve Assy.	1
6	N/A	Block-unloading	1
7	*	O-ring	2
8	E05-6-8001-201	Unloading PIn	1
9	*	Chrome Steel Balls 3/8"	1
10	E05-6-8005-108	Ball Retainer	1
11	*	Low Pressure Spring	1

Item	Part Number	Description	Qty
12	641-1-0158-105	Socket Head Set Screw	1
13	641-1-0127-104	Socket Head Set Screw	1
14	*	High Pressure Spring	1
15	E05-6-8004-106	Relief Ball Retainer	1
16	E05-6-8006-100	Hollow Set Screw	1
17	*	Chrome Steel Balls 3/16"	1
18	E05-4-8003-102	High Pressure Seat Assy.	1
19	649-1-0063-302	Socket Head Cap Screw	4
20	641-1-0060-007	Hollow Set Screw	2
*	E05-3-9980-105	Pressure Adjusting Assy. Repair Kit	1

Electric Pumps Service Parts

PART: 655011-24VDC, C33L, C43L

SFA Companies 10939 N. Pomona Ave. Kansas City, MO 64153
Tel: 888-332-6419 * Fax: 816-448-2142
E-mail: sales@bvahydraulics.com Website: www.bvahydraulics.com

Not all components of the pump are replacement items, but are illustrated as a convenient reference of location and position in the assembly sequence.

Parts List

Item	Part Number	Description	Qty
1	**	Socket Head Cap Screw	4
2	655011-24VDC	Solenoid Control Device	1
3	D08-4-1050-108	Locking Valve Assy. (For S/A Model)	1
	D08-4-1051-100	Locking Valve Assy. (For D/A Model)	1
4	E05-6-3001-105	Pin	2
5	**	Socket Head Cap Screw	4
6	D08-6-1001-107	Valve Block (For S/A Model)	1
	D08-6-1002-109	Valve Block (For D/A Model)	1
7	609-1-0075-105	Hex Socket Pipe Plug	2
8	**	Socket Head Cap Screw	4
9	E05-6-1010-103	Gasket - Valve	1
10	E05-4-1004-200	Adaptor Assembly	1
11	D05-6-1001-106	Hex Socket Pipe Plug (For S/A Model)	1
	D05-6-1001-106	Hex Socket Pipe Plug (For D/A Model)	2
12	E05-4-1012-108	Circular Internal Assy.	1
14	601-7-0008-009	Chrome Steel Balls	1
*	D09-3-9951-107	Adaptor Assy. Repair Kit	1
**	D08-3-9950-108	Valve Assy. Bolt Repair Kit	1

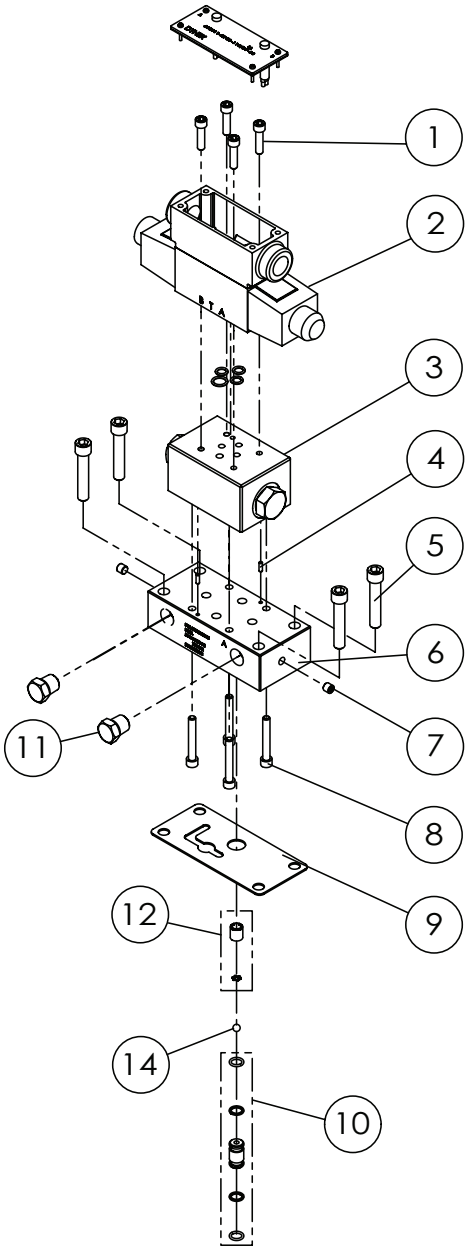

Electric Pumps Service Parts

PART: D08-4-1050-108

SFA Companies 10939 N. Pomona Ave. Kansas City, MO 64153
Tel: 888-332-6419 * Fax: 816-448-2142
E-mail: sales@bvahydraulics.com Website: www.bvahydraulics.com

Not all components of the pump are replacement items, but are illustrated as a convenient reference of location and position in the assembly sequence.

Parts List

Item	Part Number	Description	Qty
1	N/A	Locking Valve Block	1
2	D09-4-1013-109	Piston Assy.	1
-9	N/A	Piston	1
-10	*	Back-Up Ring	2
-11	*	O-Ring	1
3	D09-4-1002-104	Seat Assy.	1
-12	N/A	Seat	1
-13	*	Back-Up Ring	1
-14	*	O-Ring	1
4	601-7-0009-001	Steel Ball	1
5	512-2-0079-109	Spring	1
6	D09-4-1001-102	Spring Guide Assy.	1
-15	*	O-Ring	1

Item	Part Number	Description	Qty
-16	N/A	Spring Guide	1
7	*	O-Ring	4
8	D09-4-1014-101	Block-Unloading Assy.	1
-13	*	Back-Up Ring	1
-14	*	O-Ring	1
-15	*	O-Ring	1
-17	N/A	Block-Unloading	1
-18	N/A	Neddle	1
-19	*	Safety Spring	1
-20	N/A	Adjustment Screw	1
-21	*	O-Ring	1
-22	N/A	Safety Valve Screw	1
*	D09-3-9904-108	Locking Valve Assy. Repair Kit	1

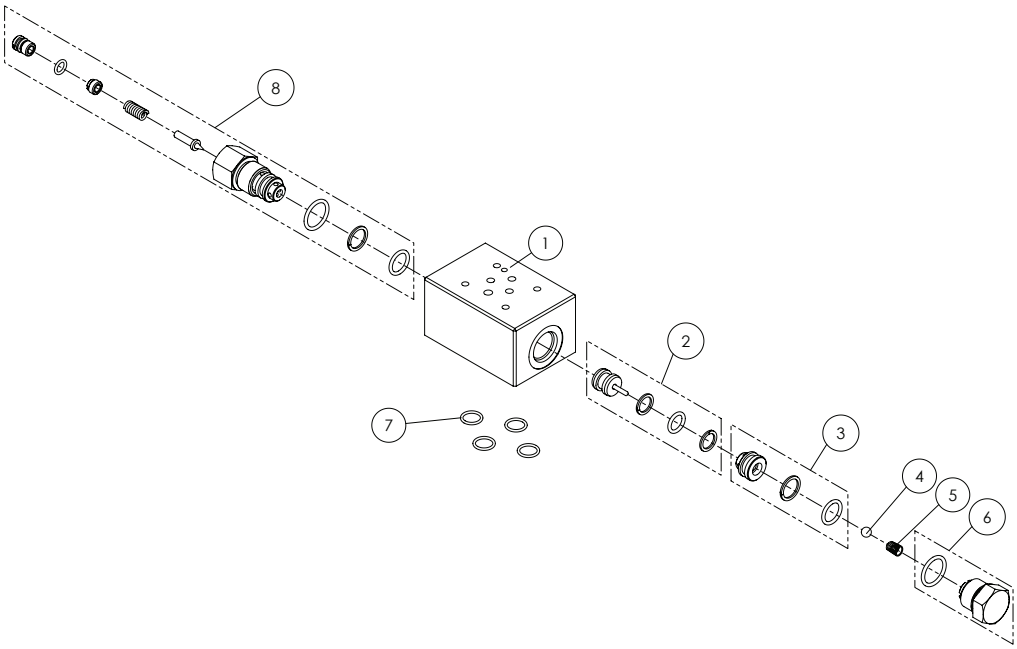

Electric Pumps Service Parts

PART: D08-4-1051-100

SFA Companies 10939 N. Pomona Ave. Kansas City, MO 64153
Tel: 888-332-6419 * Fax: 816-448-2142
E-mail: sales@bvahydraulics.com Website: www.bvahydraulics.com

Not all components of the pump are replacement items, but are illustrated as a convenient reference of location and position in the assembly sequence.

Parts List

Item	Part Number	Description	Qty
1	N/A	Locking Valve Block	1
2	D09-4-1000-100	Piston Assy.	1
-8	N/A	Piston	1
-9	*	Back-Up Ring	2
-10	*	O-Ring	1
3	D09-4-1002-104	Seat Assy.	2
-11	N/A	Seat	1
-12	*	Back-Up Ring	1
-13	*	O-Ring	1
4	601-7-0009-001	Steel Ball	2
5	512-2-0079-109	Spring	2
6	D09-4-1001-102	Spring Guide Assy.	2
-14	*	O-Ring	1
-15	N/A	Spring Guide	1
7	*	O-Ring	4
*	D09-3-9905-100	Locking Valve Assy. Repair Kit	1

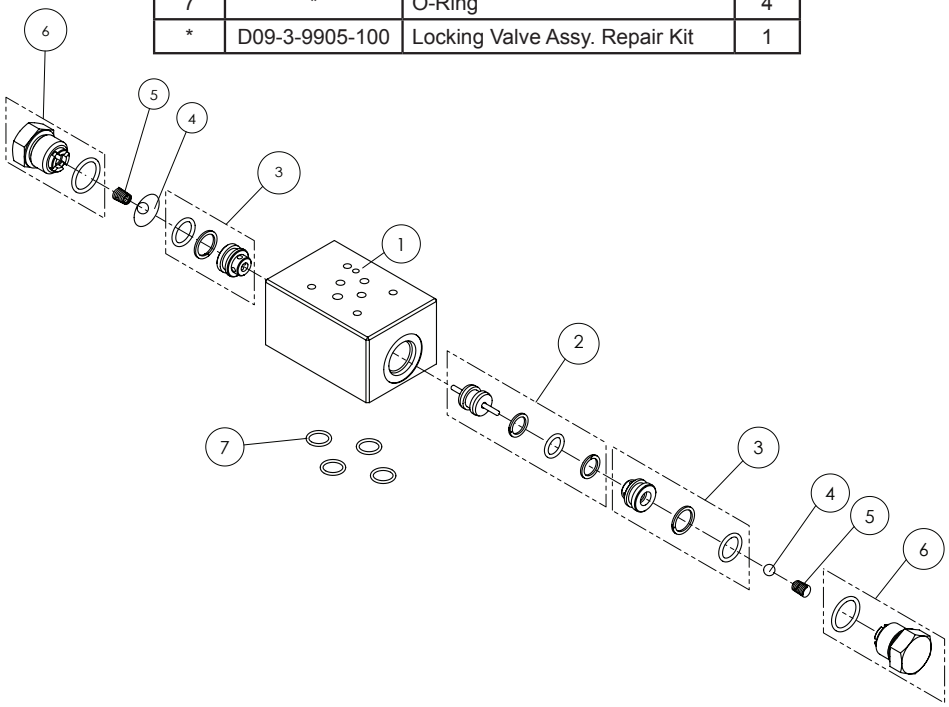

LIMITED LIFETIME WARRANTY

BVA Hydraulics®, represented in the United States by SFA Companies [“SFA”] warrants this product to be free from defects in material and workmanship for the life of the product as long as the original purchaser owns the product. The warranty is non-transferable and is subject to the terms, exclusions, and limitations described below:

- Damaged components, including but not limited to bent rams, dented or crushed cylinder walls, broken welds or couplers as well as worn out seals, o-rings and springs are the result of misuse and not covered by warranty and BVA Hydraulics will not provide any warranty credit for such damaged components.
- This warranty does not cover ordinary wear and tear, overloading, alterations (including repairs or attempted repairs not performed by BVA Hydraulics or one of its authorized personnel), improper fluid use, or use of the product in any manner for which the product was not intended or the use of which is not in accordance with the instructions or warnings provided with the product.
- In the unlikely event that a BVA Hydraulics product fails due to material defect in workmanship, you may contact SFA for disposition. In such cases, the customer’s sole and exclusive remedy for any breach or alleged breach of warranty is limited to the repair or replacement of the defective product.
- Under no circumstances is BVA Hydraulics liable for any consequential or incidental damage or loss whatsoever.
- THIS WARRANTY IS LIMITED TO NEW PRODUCTS SOLD THROUGH AUTHORIZED DISTRIBUTORS AND OTHER CHANNELS DESIGNATED BY BVA HYDRAULICS. NO AGENT, EMPLOYEE OR OTHER REPRESENTATIVE OF BVA HYDRAULICS IS AUTHORIZED TO MODIFY THIS WARRANTY.
- THE FOREGOING IS EXCLUSIVE AND IS IN LIEU OF ALL OTHER EXPRESS AND IMPLIED WARRANTIES, INCLUDING BUT NOT LIMITED TO THE IMPLIED WARRANTIES OF MERCHANTABILITY AND FOR A FITNESS FOR A PARTICULAR PURPOSE.
- Components not manufactured by BVA Hydraulics including certain motor systems, gasoline engines, and other are not covered by this warranty and instead are covered by the manufacturer’s separate manufacturer’s warranty provided in the package.
- BVA Hydraulics’ liability in all cases is limited to, and will not exceed the purchase price paid for the product.

SFA Companies
10939 N. Pomona Ave. Kansas City, MO 64153
Tel: 888-332-6419
E-mail: sales@bvahydraulics.com

Note Page

Contact:
SFA Companies
10939 N. Pomona Ave. Kansas City, MO 64153, U.S.A.
Tel:(888)332-6419 Fax:(816) 448-2142
E-Mail:sales@bvahydraulics.com
BVA Website: http://www.bvahydraulics.com