# Rolling Head Shop Press Instruction Manual

**MODELS: IMPR5506, IAPR5506, IEPR5506, IEPRS5506, IAPR5513, IEPR5513, IEPRS5513, IAPDR5506, IEPDR5513, IEPDRS5513**

SFA Companies 10939 N. Pomona Ave. Kansas City, MO 64153
Tel: 888-332-6419 * Fax: 816-448-2142
E-mail: sales@bvahydraulics.com Website: www.bvahydraulics.com

## Max. Operating Pressure 10,000 PSI

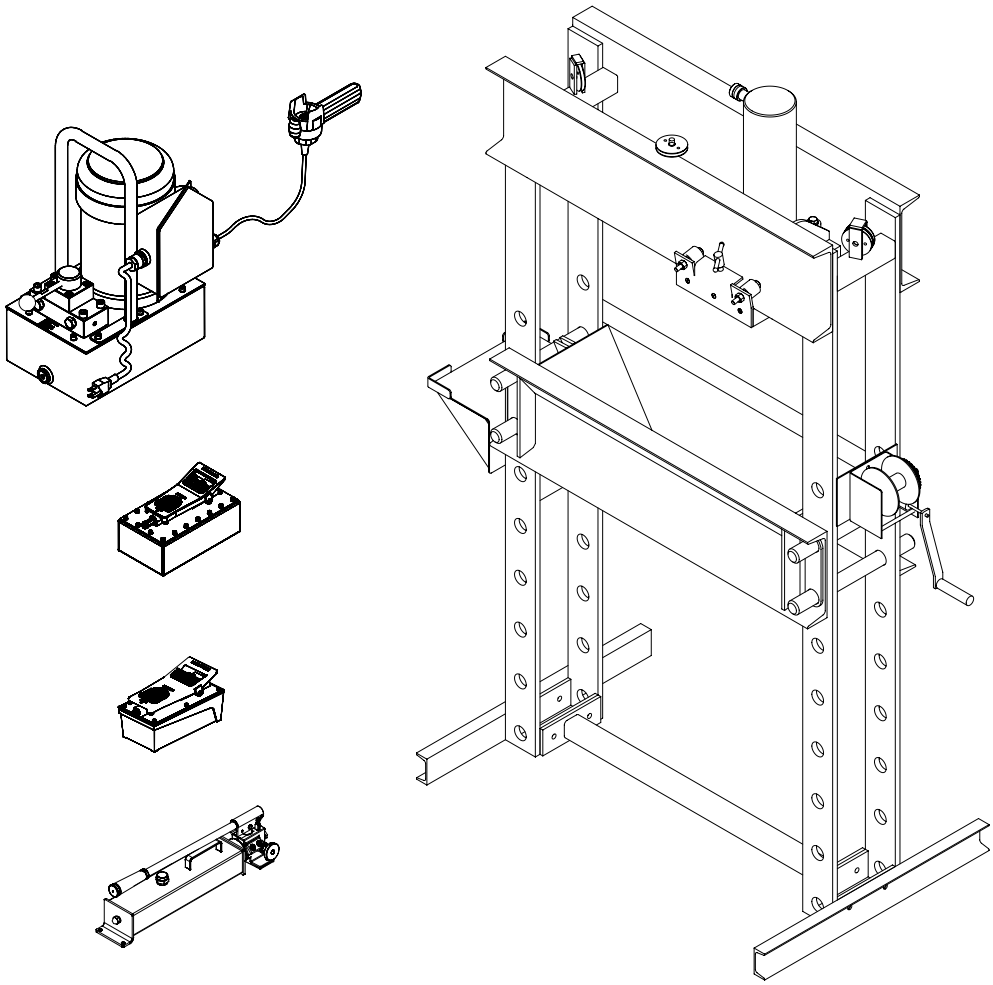

*This is the safety alert symbol. It is used to alert you to potential personal injury hazards. Obey all safety messages that follow this symbol to avoid possible injury or death.*

Printed in USA

## SAFETY AND GENERAL INFORMATION

**Save these instructions.** For your safety, read, understand, and follow the information provided with and on this device before using. The owner and/or operator shall have an understanding of the device, its operating characteristics and safety operating instructions before operating the equipment. The owner and/or operator shall be aware that use and repair of this product may require special skills and knowledge. Instructions and safety information shall be read to and discussed with the operator in the operator's native language, making sure that the operator comprehends their contents, before use of this equipment is authorized. If any doubt exists as to the safe and proper use of this device, remove from service immediately.

**Inspect before each use.** Do not use if abnormal conditions such as cracked welds, damaged, loose or missing parts are noted. Any equipment that appears damaged in any way, is found to be worn, or operates abnormally shall be removed from service until repaired. If the equipment has been or is suspected to have been subjected to an abnormal load or shock, immediately discontinue use until inspected by a factory authorized repair facility (contact distributor or manufacturer for list of authorized repair facilities). It is recommended that an annual inspection be made by an authorized repair facility. Labels and Operator's Manuals are available from the manufacturer.

## PRODUCT DESCRIPTION

BVA Hydraulics Shop presses are designed for automotive, truck, implement, fleet, and industrial repair shops where pressing, bending, straightening, forming, holding is required. Each press includes a cylinder, an electric pump with pendant switch, a winch assembly which provides safe and fast way to raise and lower the bed frame, and a pressure gauge which provides for monitoring the applied press force. Typical applications include installation and removal of alternator and power steering pump bearings, axle bearings, transmission bearings, seal, driveshaft bearings and u-joints and others. It is not intended for use as an assembly table or as fixture stand used to secure a large, final assembly component. Please refer to Cylinder and Pump manuals for more information.

## ⚠ WARNING

- *Study, understand, and follow all instructions provided with and on this device before use.*
- *Do not exceed rated capacity.*
- *Prior to use, make sure press is securely anchored.*
- *The press shall be installed and operated in accordance with federal (OSHA), state and local safety standards.*
- *Operators and observers shall wear eye protection that meets ANSI Z87.1 and OSHA standards.*
- *Keep hands, arms, feet and legs out of the work area. Accidental slippage can result in personal injury.*
- *Use appropriate guarding to contain any pieces that may break or fly apart when applying force.*
- *Use only press accessories having a capacity rating equal to or greater than the capacity of the press.*
- *Verify lift cables are slack before pressing on the bolster.*
- *Avoid off-center loads.*
- *No alterations shall be made to the product.*
- *Failure to heed and understand these instructions and markings may result in personal injury, property damage or both.*

⚠ **WARNING:** *To reduce the risk of personal injury and/or property damage, ensure that the rated working pressure of each pressurized attachment is equal to or greater than the rated working pressure developed by the hydraulic pump.*

**NOTICE:** *The power retract feature of the IAPDR5506, IEPDR5513 and IEPDR5513S Shop Press models is not intended to be used under load. Never pull or raise a workpiece with the power retract feature.*

## SPECIFICATIONS

| Press Model | Rated Capacity | Cylinder Model | Pump Model/Type | Press Bed Depth (front to back) | Press Bed Width (side to side) | Press Size (H" x W" x L") | Min. Height (in.) | Max. Height (in.) |
|---|---|---|---|---|---|---|---|---|
| IMPR5506 | 55 Ton | H5506 | P2001 | 14-7/8" | 35-1/2" | 79-1/8 x 56 x 30 | 14 | 55-1/2 |
| IAPR5506 | | | PA2000 | | | | | |
| IEPR5506 | | | PE30W3N01A | | | | | |
| IEPRS5506 | | | PE30S3L01A | | | | | |
| IAPDR5506 | | HD5506 | PA3801M | | | | | |
| IAPR5513 | | H5513 | PA2000 | | | | | |
| IEPR5513 | | | PE30W3N01A | | | | | |
| IEPRS5513 | | HD5513 | PE30S3L01A | | | | | |
| IEPDR5513 | | | PE40W4N02A | | | | | |
| IEPDRS5513 | | | PE40S4L02A | | | | | |

### Cylinder

| Cylinder Model | Rated Capacity (ton) | Stroke (in.) | Effective Area ($in^3$) | Oil Volume ($in^3$) | Min Height (in.) | Max Height (in.) | Outer Dia. (in.) | Ram Dia. (in.) | Saddle Dia. (in.) | Collar Thread (in.) | Collar Thread Length (in.) |
|---|---|---|---|---|---|---|---|---|---|---|---|
| H5506 | 55 | 6.22 | 10.99 | 68.34 | 11.14 | 17.36 | 5 | 3.15 | 2.76 | 5"-12 | 2.17 |
| HD5506 | | 6.18 | | 67.93 | 13.03 | 19.21 | | 3.74 | | | 1.73 |
| H5513 | | 13.27 | | 145.77 | 18.15 | 31.42 | | 3.15 | | | 2.17 |
| HD5513 | | 13.19 | | 144.94 | 20.04 | 33.23 | | 3.74 | | | 1.73 |

### Manual Pump (Hand pump)

| Hand Pump Model | Usable Oil Volume ($in^3$) | Pressure Rating (psi) | | Oil Displacement ($in^3$) | | Oil Outlet Port Thread | Weight (lbs) |
|---|---|---|---|---|---|---|---|
| | | 1st Stage | 2nd Stage | 1st Stage | 2nd Stage | | |
| P2001 | 122 | 200 | 10,000 | 0.81 | 0.14 | 3/8"-18 NPTF | 24 |

### Air Pump

| Air Pump Model | Usable Oil Volume ($in^3$) | Pressure Rating (psi) | Oil Output Flow Rate ($in^3$/min) | | Input Air Pressure Range (psi) | Weight (lbs) |
|---|---|---|---|---|---|---|
| | | | No Load | Load | | |
| PA2000 | 122.1 | 10,000 | 65 | 12 | 110 - 175 | 20 |
| PA3801M | 232 | | | 11 | | 30 |

### Electric Pump

| Electric Pump Model | Reservoir Capacity (gal) | Pressure Rating (psi) | | Oil Output Flow Rate ($in^3$/min) | | Valve Type | Motor Size (hp) | Current Draw (A) | Motor Voltage (V) | Weight (lbs) |
|---|---|---|---|---|---|---|---|---|---|---|
| | | 1st Stage | 2nd Stage | 1st Stage | 2nd Stage | | | | | |
| PE30W3N01A | 1 | 350 | 10,000 | 293 | 18 | 3-way, 3-pos | 0.5 | 9 | 115 | 60 |
| PE30S3L01A | | | | | | | | | | |
| PE40W4N02A | 2 | 700 | | 397 | 37 | 4-way, 3-pos | 1 | 12 | | 71 |
| PE40S4L02A | | | | 311 | | | | | | 73 |

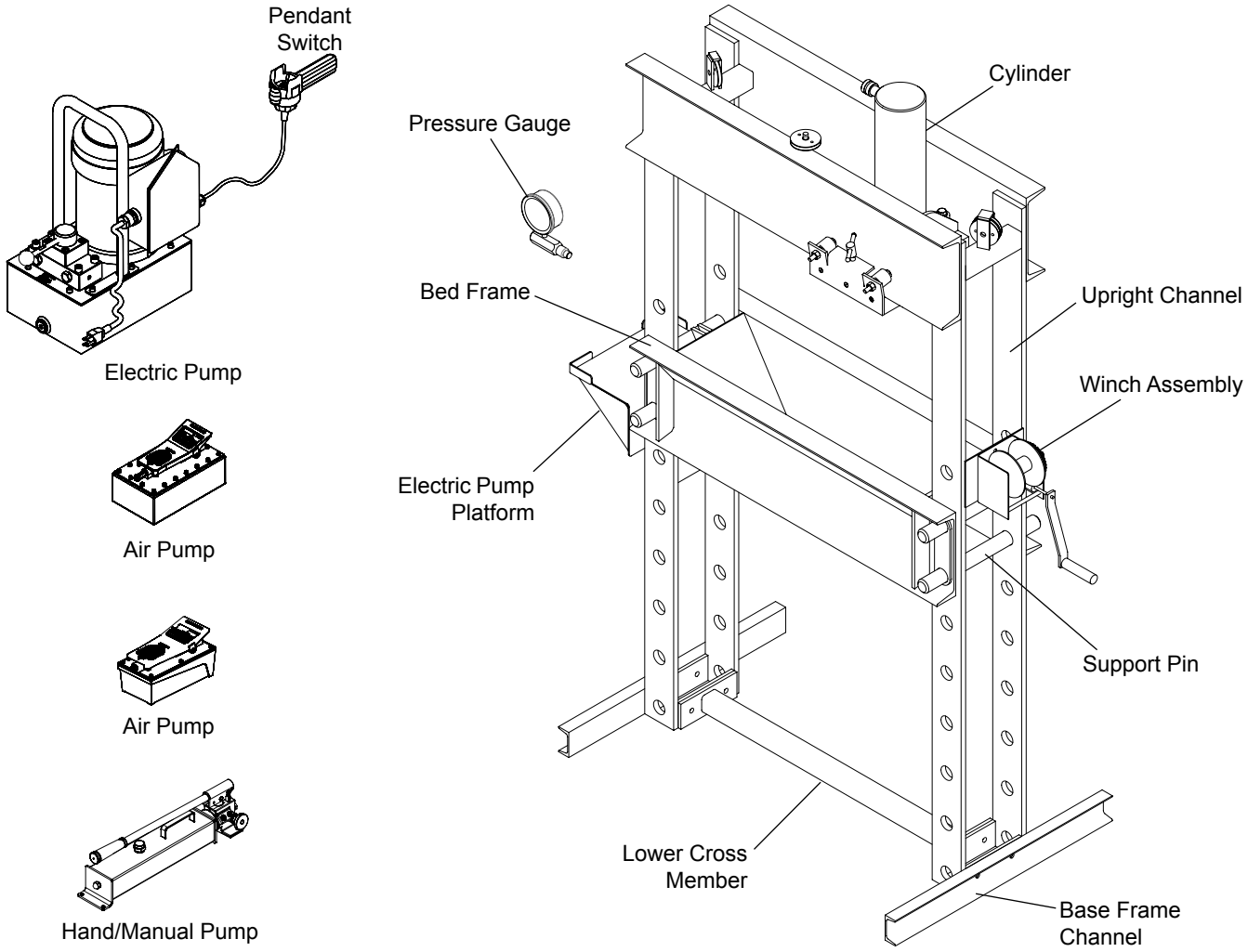


Figure 1 - Components for 55-Ton Rolling Head Shop Press.

## BEFORE USE

1. Before using this product, read the operator's manual completely and familiarize yourself thoroughly with the product, its components and recognize the potential hazards associated with its use.
2. Inspect before each use. Do not use if bent, broken or cracked components are noted. Check for and tighten any loose assemblies.
3. Verify that the product and the application are compatible, if in doubt call BVA Technical Service.

## ASSEMBLY

1. Adjust Bed Frame to lowest position and slacken winch cables.
2. Install Winch Assembly to press using (3) 3/8" bolts, washers and nuts.
3. Secure Cylinder to Cylinder Adapter Plate, and mount Adapter Plate to upper cross member using (4) 1/2" bolts and washers.

**NOTICE:** *Cylinder comes with carrying handles. Loosen Allen head attachment screws to remove handles.*

4. Attach Base Frame Channels to Upright Channels with (4) 1/2" bolts and nuts.
5. Attach Lower Cross Member to Upright Channels with (4) 1/2" bolts and nuts.
6. *For Electric Pumps only:* Adjust the Pump Platform to desire height and secure with (4) 3/8" bolts, nuts & washers provided.
7. Connect the Pressure Gauge and the Hydraulic Hose to the Gauge Adapter, then connect the Gauge Adapter to Pump.

**NOTICE:** *Use thread tape or compound on all threaded hose connections.*

8. Place pump on pump bracket and connect other end of hydraulic hose to cylinder.
9. Apply load to workpiece - **do not overload.**
10. Stabilize workpiece so that it will not inadvertently fall from bed frame once load is removed.
11. Once cylinder has fully retracted, remove workpiece. Reposition cylinder carriage only after cylinder has been retracted.

**NOTICE:** *To protect your cylinder, cease pump operation after cylinder ram is fully extended or retracted.*

## OPERATION

Refer to **BVA Owner's Manual** for the cylinder and pump operation.

**WARNING:** *There is a projectile hazard associated with using a shop press. Ensure workpiece is centerloaded and secure. Reduce risk of flying debris by following all operating instructions. Know your press and hazards associated with its use. Keep hands and feet from bed area at all times.*

**WARNING:** *Risk of serious eye injury from projected debris. Reduce risk by wearing safety goggles when working with or around press.*

1. Use winch to raise/lower bed frame to desired height and insert one support pin. Readjust bed frame as necessary until ALL support pins can be installed.

**WARNING:** *Use all four support pins to hold press bed*

**CAUTION:** *Before disassembling, adjust bed frame section to lowest position.*

2. Slacken cable until bed frame is resting fully on support pins.
3. Secure workpiece to bed frame using every precaution necessary to ensure safety and prevent property damage.
4. Loosen both screw clamps and position cylinder carriage directly over workpiece. *Avoid off-center loads.* Retighten screw clamps.
5. Pump operation:
   a.) *Manual pump*: Close release valve by turning release valve clockwise, and pumping handle to extend cylinder ram. To retract, open release valve.
   b.) *Air pump*: Connect to suitable air supply, press foot pedal to extend cylinder ram. To retract, activate release valve by pressing raised, stirrup shaped portion of foot pedal.
   c.) *Electric pump*: Engage ON/OFF switch to start electric pump and idle for a few minutes before operating cylinder. Use control valve knob to extend or retract cylinder ram.

**WARNING:** *Monitor the pressure gauge while in operation and never leave loaded press unattended.*

**NOTICE:** *Never operate pump with hose disconnected from cylinder. If operated in this condition, the hydraulic hose and connections become pressurized, increasing burst hazard.*

## MAINTENANCE

Reference cylinder and pump manuals for maintenance and adding/changing hydraulic oil instructions. For best results, change oil once per year. Use premium quality hydraulic oil.

### Lubrication

A periodic coating of light lubricating oil to pivot points and hinges will prevent rust and assure assemblies move freely.

### Storage

Depressurize the hydraulic system, disconnect hydraulic hose and lower the bed frame to lowest position. Disconnect both hoses on Double Acting Shop Presses.

**CAUTION:** *Before disassembling, adjust bed frame section to lowest position.*

# Rolling Head Shop Press Service Parts

**MODELS: IMPR5506, IAPR5506, IEPR5506, IEPRS5506, IAPR5513, IEPR5513, IEPRS5513, IAPDR5506, IEPDR5513, IEPDRS5513**

SFA Companies 10939 N. Pomona Ave. Kansas City, MO 64153
Tel: 888-332-6419 * Fax: 816-448-2142
E-mail: sales@bvahydraulics.com Website: www.bvahydraulics.com

## Parts Illustration

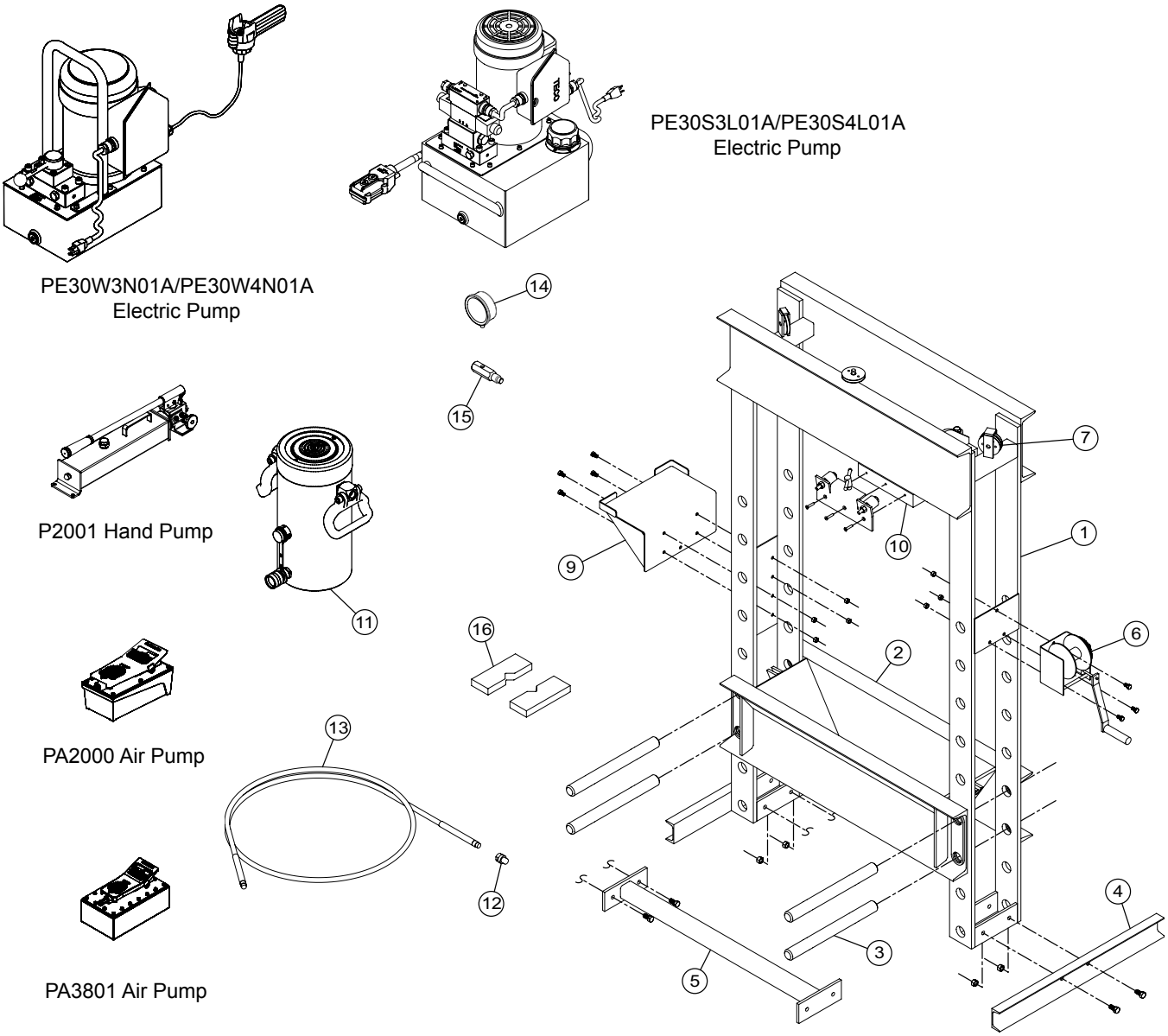


Figure 3: Replacement Parts Illustration for Rolling Head Shop Press

# Rolling Head Shop Press Service Parts

**MODELS: IMPR5506, IAPR5506, IEPR5506, IEPRS5506, IAPR5513, IEPR5513, IEPRS5513, IAPDR5506, IEPDR5513, IEPDRS5513**

SFA Companies 10939 N. Pomona Ave. Kansas City, MO 64153
Tel: 888-332-6419 * Fax: 816-448-2142
E-mail: sales@bvahydraulics.com Website: www.bvahydraulics.com

## Parts List

**Replacement Parts for 55-Ton Rolling Head Shop Press**

| Item | Part No. | Description | Qty |
|---|---|---|---|
| 1 | N/A | Shop Press Frame | 1 |
| 2 | N/A | Bed Frame | 1 |
| 3 | 400-002-003 | Bed Support Pin | 2 |
| 4 | 400-002-004 | Frame Base Channel | 2 |
| 5 | 400-002-005 | Lower Stabilizer | 1 |
| 6 | 400-002-006 | Winch | 1 |
| 7 | 400-002-007 | Cable Sheaves (Pulley) | 4 |
| 8 | 400-002-008 | Cable (not shown) | 2 |
| 9 | 400-002-009 | Pump Platform | 1 |
| 10 | 400-002-012 | Cylinder Adapter Plate | 1 |
| 11 | H5506 | Cylinder, 55-ton, 6” stroke | 1 |
| | HD5506 | Cylinder, 55-ton Double Acting, 6” stroke | 1 |
| | H5513 | Cylinder, 55-ton, 13” stroke | 1 |
| | HD5513 | Cylinder, 55-tob, Double Acting, 13” stroke | 1 |
| 12 | CH38M | Male Half Coupler, 3/8" | 1 |
| 13 | CS3838 | Hydraulic Hose, 3/8"ID | 1 |
| 14 | GW4014 | Wet Pressure Gauge | 1 |
| 15 | CF3814 | Gauge Adapter | 1 |
| 16 | AP55 | Arbor Plates, 55 Ton | 1 |
| 17 | P2001 | Pump, 2-speed, Hand | 1 |
| | PA2000 | Pump, Air | 1 |
| | PA3801M | Pump, Air, Double Acting | 1 |
| | PE30W3N01A | Pump, Electric with Pendant | 1 |
| | PE30S3L01A | Pump, Electric with Locking Solenoid Valve | 1 |
| | PE40W4N02A | Pump, Electric, Double Acting with Pendant | 1 |
| | PE40S4L02A | Pump, Electric, Double Acting with Locking Solenoid Valve | 1 |
| 18 | 300-002-016 | Pump Mounting Hardware Kit | 1 |

## TROUBLESHOOTING

A system failure may or may not be the result of a pump malfunction. The following information is intended to be used as an aid in determining if a problem exist.

| Symptom | Possible Causes | Corrective Action |
|---|---|---|
| Erratic Ram Performance | • Air in system or pump cavitation<br>• External leak<br>• Internal hydraulic leak | • Follow pump instructions for bleeding air<br>• Tighten all connections<br>• Contact Service Center |
| Pump or ram fails to maintain pressure | • Overload condition<br>• External leak<br>• Internal hydraulic leak<br>• Ram seals leaking<br>• Pump or valve malfunctioning | • Remedy overload condition<br>• Tighten all connections<br>• Contact Service Center<br>• Contact Service Center<br>• Check pump operating instructions |
| Ram extends partially | • Hydraulic oil level too low in pump<br>• Load is above the capacity of system<br>• Ram is sticking or binding | • Fill and bleed the system<br>• Match the capacity to application<br>• Contact Service Center |
| Slow ram movement | • Loose connection or coupler<br>• Restricted hydraulic line or fitting<br>• Pump not working correctly<br>• Ram seals leaking | • Tighten connection or coupler<br>• Clean and replace if damaged<br>• Check pump operating instructions<br>• Replace cylinder |
| Ram leaks hydraulic fluid | • Worn or damaged seals | • Contact Service Center |
| Ram will not retract or retracts slower than normal | • Linkage binding<br>• Loose couplers<br>• Malfunctioning coupler<br>• Weak or broken retraction springs<br>• Ram damaged internally<br>• Pump reservoir too full | • Lubricate all moving parts<br>• Tighten couplers<br>• Depressurize pump and hose, remove application, then replace a new coupler<br>• Contact Service Center<br>• Contact Service Center<br>• Drain hydraulic fluid to correct level |
| Motor will not start (Models IEPR5506, IEPR5513, IEPR5513S, IEPDR5513 & IEPDR5513S) | • No power or wrong voltage<br>• Damaged power cord<br>• Tripped circuit breaker<br>• Loose or faulty wiring | • Check the power supply & voltage<br>• Contact Customer Service<br>• Make sure breaker is of adequate size<br>• Contact Customer Service |
| Motor cuts out (Models IEPR5506, IEPR5513, IEPR5513S, IEPDR5513 & IEPDR5513S) | • Extension cord too long<br>• Faulty motor<br>• Overheated motor can trip circuit breaker | • Replace with shorter cord<br>• Replace or repair<br>• Allow motor to cool, reset circuit breaker |

## LIMITED LIFETIME WARRANTY

BVA Hydraulics®, represented in the United States by **SFA Companies** [“SFA”] warrants this product to be free from defects in material and workmanship for the life of the product as long as the original purchaser owns the product. The warranty is non-transferable and is subject to the terms, exclusions, and limitations described below:

- Damaged components, including but not limited to bent rams, dented or crushed cylinder walls, broken welds or couplers as well as worn out seals, o-rings and springs are the result of misuse and not covered by warranty and BVA Hydraulics will not provide any warranty credit for such damaged components.
- This warranty does not cover ordinary wear and tear, overloading, alterations (including repairs or attempted repairs not performed by BVA Hydraulics or one of its authorized personnel), improper fluid use, or use of the product in any manner for which the product was not intended or the use of which is not in accordance with the instructions or warnings provided with the product.
- In the unlikely event that a BVA Hydraulics product fails due to material defect in workmanship, you may contact SFA Companies for disposition. In such cases, the customer’s sole and exclusive remedy for any breach or alleged breach of warranty is limited to the repair or replacement of the defective product.
- Under no circumstances is BVA Hydraulics liable for any consequential or incidental damage or loss whatsoever.
- THIS WARRANTY IS LIMITED TO NEW PRODUCTS SOLD THROUGH AUTHORIZED DISTRIBUTORS AND OTHER CHANNELS DESIGNATED BY BVA HYDRAULICS. NO AGENT, EMPLOYEE OR OTHER REPRESENTATIVE OF BVA HYDRAULICS IS AUTHORIZED TO MODIFY THIS WARRANTY.
- THE FOREGOING IS EXCLUSIVE AND IS IN LIEU OF ALL OTHER EXPRESS AND IMPLIED WARRANTIES, INCLUDING BUT NOT LIMITED TO THE IMPLIED WARRANTIES OF MERCHANTABILITY AND FOR A FITNESS FOR A PARTICULAR PURPOSE.
- Components not manufactured by BVA Hydraulics including certain motor systems, gasoline engines, and other are not covered by this warranty and instead are covered by the manufacturer’s separate manufacturer’s warranty provided in the package.
- BVA Hydraulics’ liability in all cases is limited to, and will not exceed the purchase price paid for the product.