Blackhawk Automotive™

Blackhawk Automotive is a Licensed Trade Mark

Made by SFA Companies, Kansas City, MO

Hydraulic Long Rams

Operating Instructions & Parts Manual

Model	Capacity
BH2015	1 1/2 Ton
BH2035	3 Ton
BH2045	4 Ton
BH2085	8 Ton
BH2081 *(Air option)*	8 Ton

This is the safety alert symbol. It is used to alert you to potential personal injury hazards. Obey all safety messages that follow this symbol to avoid possible injury or death.

ADVERTENCIA

- Leer, comprender, y seguir las instrucciónes antes de utilizar el aparato.
- El manual de instrucciónes y la información de seguridad deben estar comunicado en lengua del operador antes del uso.
- No seguir estas indicaciónes puede causar daños personales o materiales.

WARNING

To avoid **crushing and related injuries**:

NEVER work on, under or around a load supported only by hydraulic ram. **ALWAYS** use adequately rated mechanical means.

⚠ **WARNING:** Cancer and Reproductive Harm.
⚠ **AVERTISSEMENT:** Cancer et dommages au système reproducteur.
⚠ **ADVERTENCIA:** Cáncer y daño reproductivo.
www.P65Warnings.ca.gov

SFA Companies
10939 N. Pomona Ave. Kansas City, MO 64153
sales@blackhawk-automotive.com

Read this manual and follow all the Safety Rules and Operating Instructions before using this product.

Made in PRC
BH2015-M0_082018

SAFETY and GENERAL INFORMATION

Save these instructions. For your safety *read, understand, and follow* the information provided with and on this ram. The owner and operator of this equipment shall have an understanding of this ram and safe operating procedures before attempting to use. The owner and operator shall be aware that use and repair of this product may require special skills and knowledge. Instructions and safety information shall be conveyed in the operator's native language before use of this ram is authorized. If any doubt exists as to the safe and proper use of this ram, remove from service immediately.

Inspect before each use. Do not use if broken, bent, cracked, or damaged parts (including labels) are noted. Any ram that appears damaged in any way, operates abnormally or is missing parts, shall be removed from service immediately and the manufacturer notified. If you suspect that the ram was subjected to a shock load (a load dropped suddenly, unexpectedly upon it), immediately discontinue use until the ram has been checked by a factory authorized service center (contact distributor or manufacturer for list of Authorized Service Centers). It is recommended that an annual inspection be done by qualified personnel. Replace worn or damaged parts with Blackhawk authorized replacement parts only. Labels and owner's manuals are available from manufacturer.

PRODUCT DESCRIPTION

Hydraulic long ram is designed to lift, not support, rated capacity loads. This ram is intended to be used with corresponding Blackhawk Automotive engine cranes. Immediately after lifting, the load must be supported by mechanical means. For air option model, ensure that air source can dedicate 7.8 CFM @ 110-175 psi to each ram operated.

***Never** use hydraulic ram as a stand alone device. After lifting, **immediately** support the lifted load with appropriately rated mechanical support.*

PREPARATION

Before Use

1. Verify that the product and application are compatible, if in doubt contact customer support (816) 891-6390.
2. Before using this product, read the operator's manual completely and familiarize yourself thoroughly with the product, its components and recognize the hazards associated with its use.
3. To familiarize yourself with basic operation, locate and turn the release valve lever:
   a. Clockwise until firm resistance is felt to further turning. This is the '**CLOSED**' release valve position used to **raise** the ram plunger.
   b. Counter-clockwise, but no more than 1/2 turn from the closed position. This is the '**OPEN**' release valve position used to **lower** the ram plunger.
4. With ram plunger fully retracted, locate and remove the oil filler plug. Insert the handle into the handle sleeve, then pump 6 to 8 strokes. This will help release any pressurized air, which may be trapped within the reservoir. Ensure the oil level is just below the oil filler hole. Reinstall the oil filler plug.
5. For air option model BH2081:
   Pour a teaspoon of good quality, air tool lubricant into the air supply inlet of the lift control valve. Connect to air supply and operate for 3 seconds to evenly distribute lubricant.

   Note: The ram is equipped with the popular 1/4" NPT air coupler. When installing a different air coupler of your choice, ensure that thread tape or compound is used when servicing connections. To ensure dependable, trouble free operation an inline air dryer and oiler is recommended.
6. Check that the pump operates smoothly before putting into service. Replace worn or damaged parts and assemblies with Blackhawk authorized replacement parts only.

Bleeding / Venting Trapped Air

With the release valve in the OPEN position (3b above) and with ram plunger fully lowered, locate and remove the oil filler plug. Insert the handle into the handle sleeve; then pump 6 to 8 full strokes. This will help release any pressurized air which may be trapped within the reservoir. Oil level should be even with the bottom of the oil filler hole. Reinstall the oil filler plug.

SPECIFICATIONS

Model	Capacity	Min. Height	Max. Height	Base Size (L x W)	Volume of Hydraulic Oil	Net Weight
BH2015	1 1/2 Ton	19 7/8”	35 1/4”	5 1/8” x 4 1/2”	353 mL	17.0 lb.
BH2035	3 Ton					
BH2045	4 Ton					
BH2085	8 Ton	24 1/8”	43 1/4”	5” x 4 3/4”	695 mL	29.7 lb.
BH2081	8 Ton			7 1/8” x 5”		37.4 lb.

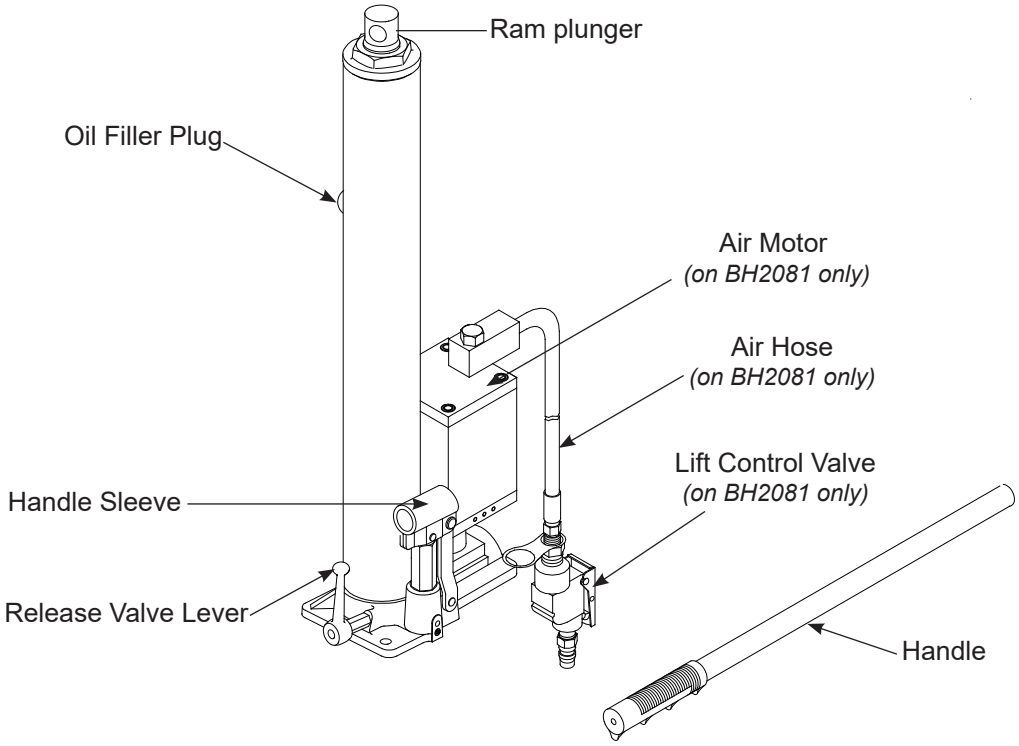

Figure 1 - Typical Hydraulic Long Ram Nomenclature (BH2081 shown)

⚠ WARNING

- **Study, understand, and follow** all printed materials provided with/on this product before use.
- **Do not** exceed rated capacity.
- **This is a lifting device only!**
- **Immediately** after lifting, support the load with **a**ppropriately rated mechanical support.
- Use only on hard, level surface.
- Do not use adapters or accessories that are not provided initially.
- Lift only on areas of the load as specified by the load's manufacturer.
- On air option model, never wire, clamp or otherwise disable the lift control valve to function by other than operator's hand.
- No alterations shall be made to this product.
- Failure to heed these markings may result in personal injury and/or property damage.

⚠ WARNING

To avoid **crushing and related injuries**:

- **Never** work on, under or around a load supported only by hydraulic ram.
- **Always** use adequately rated mechanical support.
- **Do not** use this device to lift, level, lower, support nor move a house, mobile home, travel trailer, camper or any building structure.
- **Be alert** and **sober** when using this product. Do not operate under the influence of drugs or alcohol.

⚠ *Only attachments and/or adapters supplied by the manufacturer shall be used.*

OPERATION

Raising the Ram Plunger

1. Locate and close release valve by turning it clockwise until firm resistance is felt to further thread engagement.
2. To raise:
   a) For models BH2015, BH2035, BH2045 & BH2085: Insert handle into handle sleeve and pump.
   b) For model BH2081: Squeeze the lift control valve or insert handle into handle sleeve and pump.
   DO NOT OPERATE BY AIR AND BY HAND PUMPING AT THE SAME TIME.
3. Continue pumping until load reaches desired height.
4. **Immediately** secure lifted load with appropriately rated mechanical means such as jack stands or engine stand.

⚠ *Do not use an extender on the air hose or the operating handle.*

Lowering

⚠ *Make certain that all personnel are clear of the load before lowering.* ***Control*** *the rate of descent of the load* ***at all times****. The* ***more*** *you open the release valve, the* ***faster*** *the load descends.*

1. Raise load high enough to clear the mechanical supports, then carefully remove the supports.
2. Slowly turn the release valve lever counter-clockwise, but no more than 2 turns. <u>If the load fails to lower</u>:
   a. Use another lifting device or ram to raise the load high enough to reinstall mechanical supports.
   b. Remove the affected ram and then the supports.
   c. Lower the load by turning the release valve lever counter-clockwise, but no more than 2 turns.
3. After removing ram from under the load, push ram plunger and handle sleeve down to reduce exposure to rust and contamination.

MAINTENANCE

Important: Use only a good grade hydraulic oil. Avoid mixing different types of fluid and NEVER use brake fluid, turbine oil, transmission fluid, motor oil or glycerin. Improper fluid can cause premature failure of the ram and the potential for sudden and immediate loss of load. We recommend Hein-Werner HW93291 or equivalent.

Adding oil

1. With ram plunger fully lowered and pump piston fully depressed, set ram in its upright, level position. Remove oil filler plug.
2. Fill with oil until just below the rim of the oil filler hole. Reinstall the oil filler plug.

Changing oil

For best performance and longest life, replace the complete fluid supply at least once per year.

1. With ram plunger fully lowered and pump piston fully depressed, remove the oil filler plug.
2. Lay the ram on its side and drain the fluid into a suitable container.

Note: Dispose of hydraulic oil in accordance with local regulations.

3. Fill with oil until just below the rim of the oil filler hole. Reinstall the oil filler plug.

Lubrication

1. A periodic coating of light lubricating oil to pivot points, axles and hinges will help to prevent rust and assure that pump assemblies move freely.
2. For air option model BH2081: When used on a daily basis, air pump should be internally lubricated before each use. Use **only** good quality air tool lubricant. If no inline oiler is used, pour a teaspoon of air tool oil into the inlet of the air control valve. Simply operate the ram using the air feature in order to fully distribute the oil.

Cleaning

Periodically check the pump piston and ram plunger for signs of rust or corrosion. Clean as needed and wipe with an oily cloth.

Note: Never use sandpaper or abrasive material on these surfaces!

Storage

When not in use, store the ram with pump piston and ram plunger fully retracted and air supply disconnected.

TROUBLESHOOTING

Symptom	Possible Causes	Corrective Action
Ram will not lift load	• Release valve not tightly closed • Load is too heavy	• Ensure release valve tightly closed • Consider higher capacity ram
Ram will lift, but not maintain pressure	• Release valve not tightly closed • Hydraulic unit malfunction	• Ensure release valve tightly closed • Contact Blackhawk Tech. Service
Ram will not lower after unloading	• Reservoir overfilled	• Ensure load is removed, then drain fluid to proper level
Poor lift performance	• Fluid level low • Air trapped in system	• Ensure proper fluid level • With ram fully retracted, remove oil filler plug to let pressurized air escape, then reinstall oil filler plug
Will not lift to full extension	• Fluid level low	• Ensure proper fluid level

REPLACEMENT PARTS

Not all components of the ram are replacement items, but are illustrated as a convenient reference of location and position in the assembly sequence. When ordering parts, give Model number, serial number and parts description. Call or write for current pricing: SFA Companies Inc. 10939 N. Pomona Ave. Kansas City, MO 64153, U.S.A. Tel: (816)891-6390 Fax: (816)891-6599 E-Mail: sales@blackhawk-automotive.com

Models BH2015, BH2035, BH2045, BH2085 & BH2081

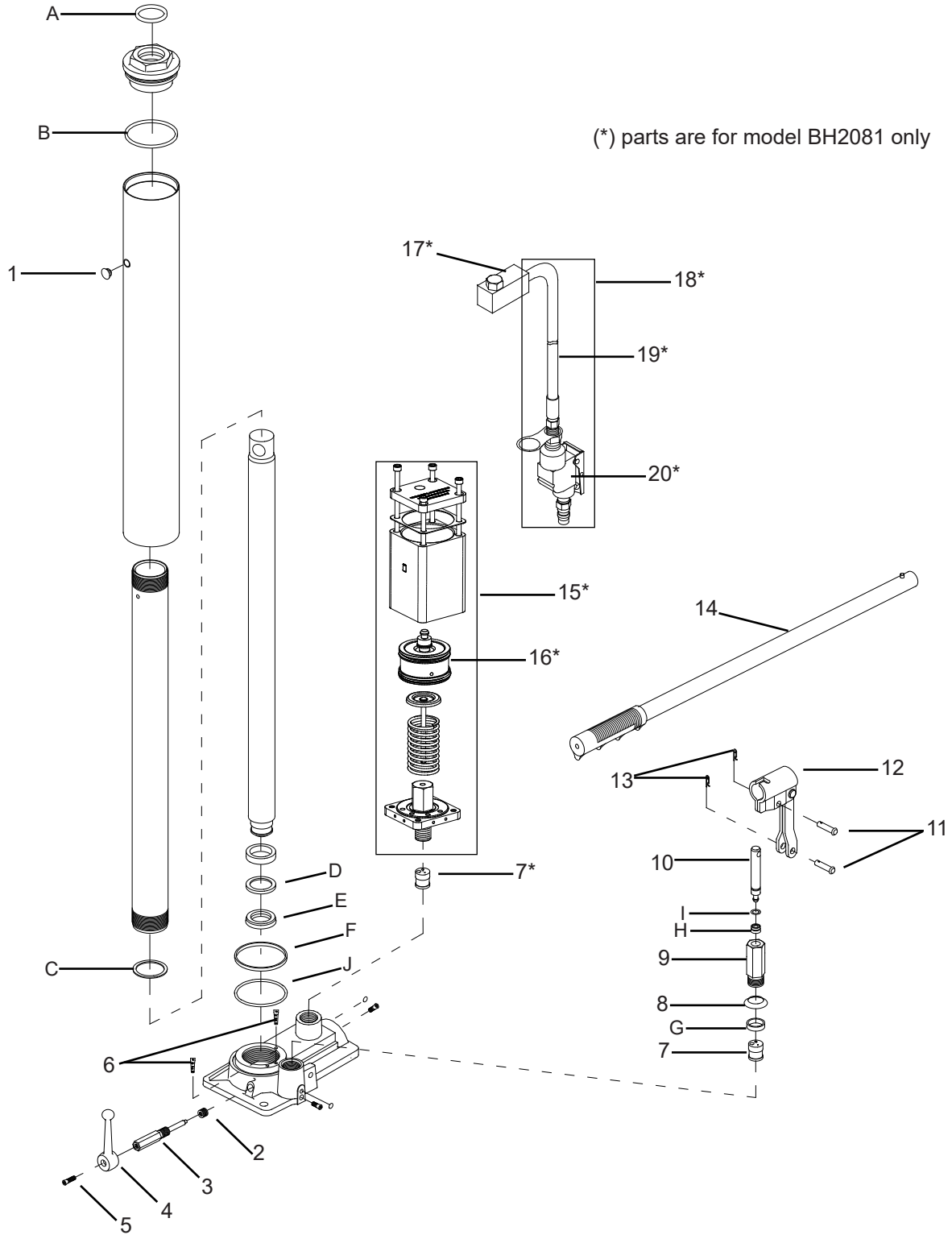

Figure 2 - Replacement Parts Illustration (BH2081 shown)

ITEM	Parts Number for Model					DESCRIPTION	QTY
	BH2015	BH2035	BH2045	BH2085	BH2081		
1	5905-00100-100					Filler Plug	1
2	5905-00056-000					Seal	1
3	BL80-16001-000					Release Valve	1
4	BL80-16002-000					Release Lever	1
5	5107-05016-000					Screw	1
6	G931-07015-000					Filter	2
7	BL80-15000-000 *(2 pc. for model BH2081)*					Hydraulic Cartridge	1
8	BL80-14002-000					Washer	1
9	BL80-14001-000					Pump Cylinder	1
10	BL80-14101-000					Pump Piston	1
11	5403-08028-000					Pin	2
12	BL80-13000-000					Handle Sleeve	1
13	5405-02018-000					Snap Pin	2
14	BL80-20000-000				BL80-42000-000	Handle	1
15	N/A				A27010-0001	Air Motor	1
16	N/A				A270-01100-0000	Piston, Air Motor	1
17	N/A				A27010-0002	Air Inlet Swivel	1
18	N/A				A20060-0005	Hose Assembly	1
19	N/A				A20060-0006	Air Hose	1
20	N/A				A20060-0007	Air Control Valve	1
21	BL400S-034			BL800S-034		Seal Kit (#1, 2 & A~J)	1
22	N/A			N/A	A27010-0000	Seal Kit for Air Motor# 15	1

Seal Kit (item#21) Contents:

Item	Description	Qty
1	Filler Plug	1
2	Seal	1
A	O-ring	1
B	O-ring	1
C	Gasket	1
D	Back-up Ring	1
E	U-cup	1
F	Back-up Ring	1
G	Seal	1
H	Seal	1
I	O-ring	1
J	Seal	1

ONE YEAR LIMITED WARRANTY

For a period of one (1) year from date of purchase, SFA Companies will repair or replace, at its option, without charge, any of its products which fails due to a defect in material or workmanship under normal usage. This limited warranty is a consumer's exclusive remedy.

Performance of any obligation under this warranty may be obtained by returning the warranted product, freight prepaid, to SFA Companies Warranty Service Department, 10939 N. Pomona Ave., Kansas city, MO 64153.
Except where such limitations and exclusions are specifically prohibited by applicable law.

(1) THE CONSUMER'S SOLE AND EXCLUSIVE REMEDY SHALL BE THE REPAIR OR REPLACEMENT OF DEFECTIVE PRODUCTS AS DESCRIBED ABOVE.
(2) SFA COMPANIES SHALL NOT BE LIABLE FOR ANY CONSEQUENTIAL OR INCIDENTAL DAMAGE OR LOSS WHATSOEVER.
(3) ANY IMPLIED WARRANTIES, INCLUDING WITHOUT LIMITATION THE IMPLIED WARRANTIES OF MERCHANTABILITY AND FITNESS FOR A PARTICULAR PURPOSE, SHALL BE LIMITED TO ONE YEAR, OTHERWISE THE REPAIR, REPLACEMENT OR REFUND AS PROVIDED UNDER THIS EXPRESS LIMITED WARRANTY IS THE EXCLUSIVE REMEDY OF THE CONSUMER, AND IS PROVIDED IN LIEU OF ALL OTHER WARRANTIES, EXPRESS OR IMPLIED.
(4) ANY MODIFICATION, ALTERATION, ABUSE, UNAUTHORIZED SERVICE OR ORNAMENTAL DESIGN VOIDS THIS WARRANTY AND IS NOT COVERED BY THIS WARRANTY.

Some states do not allow limitations on how long an implied warranty lasts, so the above limitation may not apply to you. Some states do not allow the exclusion or limitation of incidental or consequential damages, so the above limitation or exclusion may not apply to you. This warranty gives you specific legal rights, and you may also have other rights which vary from state to state.

SFA Companies
10939 N. Pomona Ave. Kansas City, MO 64153
816-891-6390
sales@blackhawk-automotive.com