Operating Instructions & Parts Manual

OMEGALIFT™ EQUIPMENT

Hydraulic Truck Jack

Model	Capacity
23221C	22 Ton
23222C (Low Profile)	22 Ton
23301	30 Ton

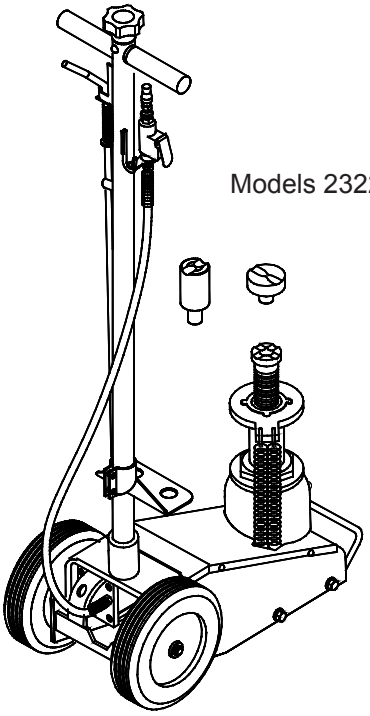

Models 23221C & 23222C

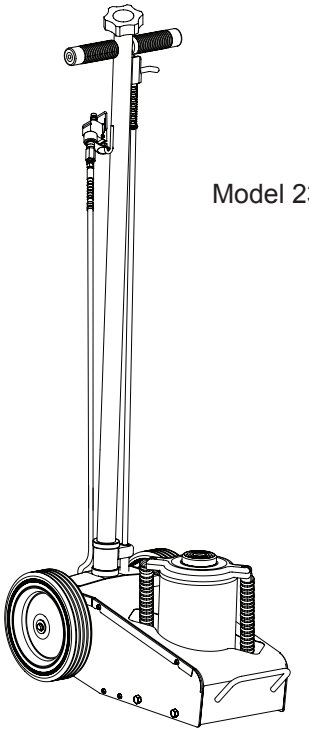

Model 23301

U.S. Patent No's. 5,341,723
& 5,946,912

This is the safety alert symbol. It is used to alert you to potential personal injury hazards. Obey all safety messages that follow this symbol to avoid possible injury or death.

SFA Companies
http://www.omegalift.com

Read this manual and follow all the Safety Rules and Operating Instructions before using this product.

© Sep. 2017

SAFETY AND GENERAL INFORMATION

Save these instructions. For your safety, read, understand, and follow the information provided with and on this device before using. The owner and/or operator shall have an understanding of the device, its operating characteristics and safety operating instructions before operating the equipment. The owner and/or operator shall be aware that use and repair of this product may require special skills and knowledge. Instructions and safety information shall be read to and discussed with the operator in the operator's native language, making sure that the operator comprehends their contents, before use of this equipment is authorized. If any doubt exists as to the safe and proper use of this device, remove from service immediately.

Inspect before each use. Do not use if abnormal conditions such as cracked welds, damaged, loose or missing parts are noted. Any equipment that appears damaged in any way, is found to be worn, or operates abnormally shall be removed from service until repaired. If the equipment has been or is suspected to have been subjected to an abnormal load or shock, immediately discontinue use until inspected by a factory authorized repair facility (contact distributor or manufacturer for list of authorized repair facilities). It is recommended that an annual inspection be made by an authorized repair facility. Labels and Operator's Manuals are available from the manufacturer.

PRODUCT DESCRIPTION

Hydraulic Truck Jacks are designed to lift, but not support, rated capacity partial vehicle loads consisting of one end of a vehicle. Immediately after lifting, support loads with a matched pair of appropriately rated matched jack stands.

PREPARATION

Reference Replacement Parts pages 6 and 7 for parts location & assembly sequence. Assemble, align and insert the handle assembly and handle position bar into the handle sleeve, then tighten the bolt on handle sleeve to prevent accidental removal of handle while in use.

Before Use

1. Verify that the product and application are compatible, if in doubt call Omega Technical Service (888) 332-6419.
2. Before using this product, read the operator's manual completely and familiarize yourself thoroughly with the product, its components and recognize the hazards associated with its use.
3. To familiarize yourself with basic operation, locate and turn the release valve (handle knob):
   a. *Clockwise* until firm resistance is felt to further turning. This is the '**CLOSED**' release valve position used to **raise** the load.
   b. *Counter-clockwise*, no more than 1 full turn from closed position. This is the '**OPEN**' release valve position used to **lower** the load. The further the release valve is turned counter-clockwise, the faster the load descends.
4. With ram fully lowered, remove the oil filler screw. Check oil level. Proper oil level should be just below the rim of the opening. Reinstall the oil filler screw.
5. Pour a teaspoon of good quality air tool lubricant into the air supply inlet of the lift control valve. Connect to air supply, then squeeze the lift control valve for 3 seconds to evenly distribute lubricant.

NOTICE: *These models are equipped with 1/4" NPT air couplers. If installing a different air coupler, ensure thread tape or compound is used on connections. To ensure dependable, trouble free operation an inline air dryer and oiler is recommended.*

6. Ensure that jack rolls freely. Raise and lower the unloaded ram throughout the lifting range before putting into service to ensure the jack operates smoothly. Replace worn or damaged parts and assemblies with Omega authorized replacement parts only.

Bleeding/Venting Trapped Air

Model 23301 only: With the release valve in the OPEN position (Step 3b above) and with ram fully lowered, locate and remove the oil filler screw (reference Figure 3, #25). This will help release any pressurized air which may be trapped within the reservoir. Activate air motor for 10 seconds to vent reservoir pressure. Reinstall the oil filler screw.

Models 23221C and 23222C only:

1. Open oil filler screw (reference Figure 2, #26).
2. Open release valve.

3. Activate air motor to vent air.
4. Remove set screw (reference Figure 2, #40) and use a screw driver to hold down check ball while very slowly pumping air motor until oil exiting from screw hole is steady without bubbles.
5. Reinstall set screw approximately two turns into hole (do not fully tighten).
6. Activate air motor a few additional times to vent air, while slowly tightening set screw. Ram should start to raise as screw is fully tightened.
7. Check oil level and reinstall filler screw (reference Figure 2, #26).

SPECIFICATIONS

Model	Capacity	Jack Size (L x W)	Min. Height	Max. Height	Hyd. Range	Extension Screw
23221C	22 Ton	22" x 12-5/8"	9-3/4"	21-3/4"	5-5/8"	3-7/8"
23222C	22 Ton	22" x 12-5/8"	8-1/2"	22"	4-5/8"	
23301	30 Ton	22" x 12-5/8"	11-1/8"	18-1/4"	7-1/8"	N/A

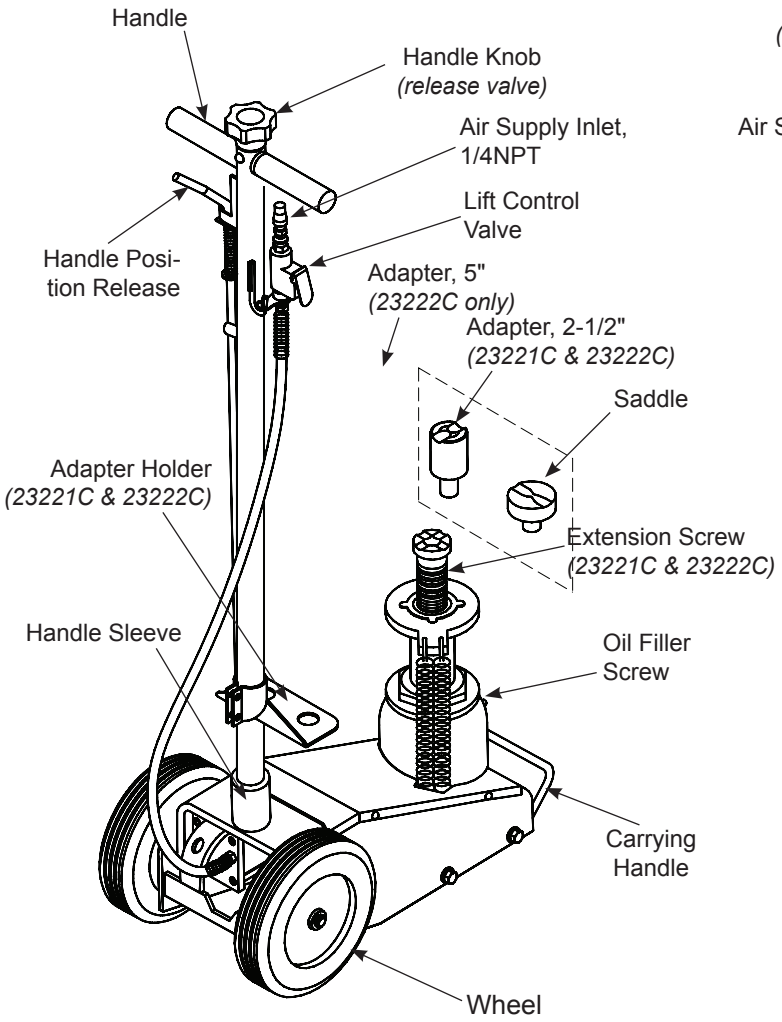

Figure 1 - Typical Truck Jack Nomenclature (23222C shown)

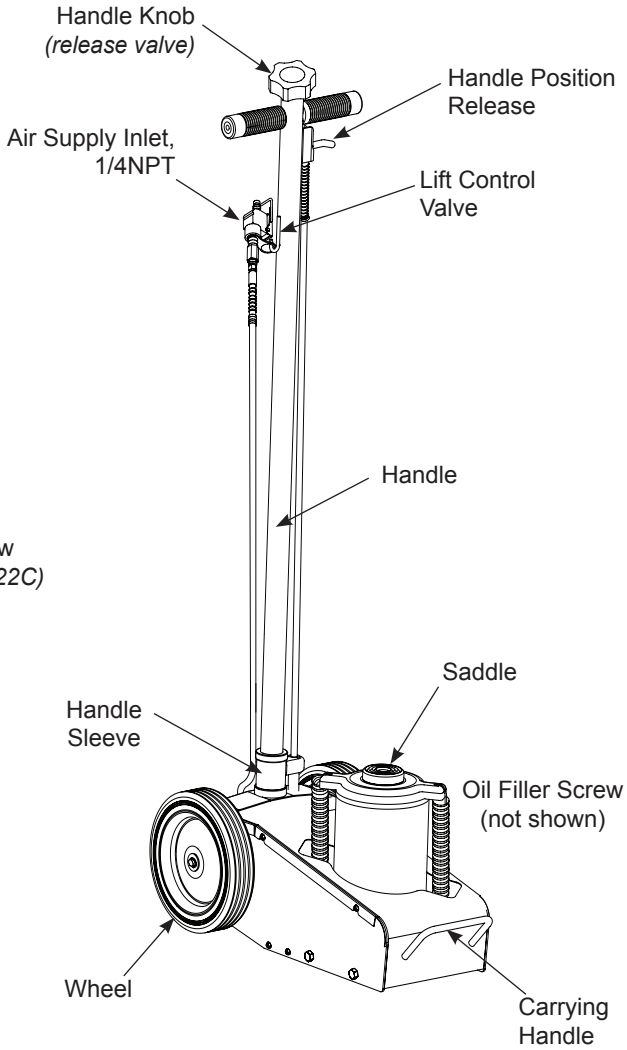

Figure 1 - Model 23301 Nomenclature

⚠WARNING

- *Study, understand, and follow all instructions before operating this device.*
- *Do not exceed rated capacity.*
- *Use only on hard, level surface capable of supporting the load.*
- *Lifting device only. Immediately after lifting, support the vehicle with appropriate means.*
- *Do not move or dolly the vehicle while on the jack.*
- *Lift only on areas of the vehicle as specified by the vehicle manufacturer.*
- *No alterations shall be made to this product.*
- *Failure to heed these markings may result in personal injury and/or property damage.*

⚠WARNING

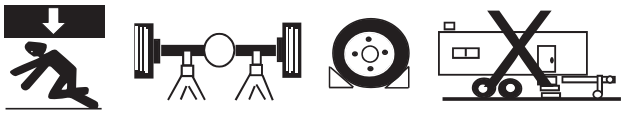

To avoid crushing and related injuries:

- *Never work on, under or around a load supported only by hydraulic jack.*
- *Always use adequately rated matched jack stands.*
- *Chock each unlifted tire in both directions.*
- *Do not use this device to lift, level, lower, support nor move a house, mobile home, travel trailer, camper or any building structure.*
- *Be alert and sober when using this product. Do not operate under the influence of drugs or alcohol.*

OPERATION (ref. Figure 1)

Lifting

NOTICE: *These jacks are equipped with handle position locks. To adjust the handle, release lock device by pulling the lever up, lever is spring loaded and will lock into desired position. Ensure lever locking mechanism is fully engaged before leaving.*

1. Connect adequate air source to the air supply inlet.
2. Follow the vehicle manufacturer's recommended guidelines for lifting. Engage the emergency brake and chock each unlifted wheel in both directions to prevent inadvertent vehicle movement.
3. Close the release valve by turning the handle knob clockwise until firm resistance is felt.
4. Center jack saddle under lift point, then squeeze the lift control valve until saddle contacts the lift point. To lift, continue squeezing the lift control valve until load reaches desired height. Simply release your grip on the lift control valve to end lift event.
5. Transfer the load to appropriately rated matched jack stands.

⚠ **WARNING:** *Never wire, clamp or otherwise disable the lift control valve to function by other than operator's hand.*

⚠ **WARNING:** *Only attachments and/or adapters supplied by the manufacturer shall be used.*

Lowering

⚠ **WARNING:** *Clear all tools and personnel before lowering load. Open release valve slowly. The further handle knob is turned counter-clockwise, the faster the load will descend. Maintain control of load at all times.*

1. Raise load high enough to clear jack stands.
2. Remove jack stands carefully.
3. Slowly turn handle knob counter-clockwise, but no more than 1 full turn. *If the load fails to lower*:
   a. Use another jack to raise vehicle high enough to reinstall jack stands.
   b. Remove the malfunctioning jack and then the jack stands.
   c. Use the functioning jack to lower vehicle.
4. After removing jack from under vehicle, fully retract the jack to reduce ram exposure to rust and contamination.

MAINTENANCE

NOTICE: *Use only good quality hydraulic jack oil. Avoid mixing different types of fluid and NEVER use brake fluid, turbine oil, transmission fluid, motor oil or glycerin. Improper fluid can cause premature failure of the jack and the potential for sudden and immediate loss of load. Premium hydraulic jack oil is recommended.*

Adding/ Changing Oil
For best performance and longest life, replace the complete fluid supply at least once per year.
1. With saddle fully lowered remove cover plate, then oil filler screw.
2. Lay jack on its side and drain fluid into a suitable container.

NOTICE: *Dispose of hydraulic fluid in accordance with local environmental regulations.*

3. Set jack in its upright, level position.
4. Fill with oil. Proper oil level is just below the rim of the opening. Reinstall the oil filler screw.
5. Perform **Bleeding/Venting Trapped Air** procedure (page 2 & 3).

Lubrication
A periodic coating of light lubricating oil to pivot points, axles and hinges will help to prevent rust and assure that wheels move freely and the pump functions smoothly. To help ensure trouble free operation, an inline air dryer and oiler is recommended.

Cleaning
Periodically check the ram for signs of rust or corrosion. Clean as needed and wipe with an oily cloth.

NOTICE: *Do not use sandpaper or abrasive material on ram and pump piston surfaces.*

Storage
When not in use, store the jack with saddle fully lowered.

REPLACEMENT PARTS (ref. pages 6 & 7)

Not all components of the jack are replacement items, but are illustrated as a convenient reference of location and position in the assembly sequence. When ordering parts, please give the Model number, part number and parts description. Call or write for current pricing: SFA Companies 10939 N. Pomona Ave. Kansas City, MO 64153, U.S.A. E-Mail: sales@omegalift.com Tel: (888) 332-6419 Fax: (816) 891-6599 Omega Website: http://www.omegalift.com

TROUBLESHOOTING

Symptom	Possible Causes	Corrective Action
Jack will not lift load	• Release valve not tightly closed • Load is too heavy • Air supply inadequate	• Ensure release valve tightly closed • Consider higher capacity jack • Ensure adequate air supply
Jack will lift, but not maintain pressure	• Release valve not tightly closed • Hydraulic unit malfunction	• Ensure release valve tightly closed • Discontinue use, contact Omega technical service
Jack will not lower after unloading	• Reservoir overfilled	• Drain fluid to proper level
Poor lift performance	• Fluid level low • Air trapped in system	• Ensure proper fluid level • Follow **Bleeding/Venting Trapped Air** procedure on page 2 & 3
Will not lift to full extension	• Fluid level low	• Ensure proper fluid level

Replacement Parts for models 23221C & 23222C:

Item	Part No.	Description	Qty
1	A070-70000-100	Handle Assembly	1
2	G251-00007-000	Handle Grip	2
3	G251-40001-000	Knob	1
4	5402-04028-000	Spring Pin	1
5	5115-10017-000	Bolt	1
6	5303-00010-100	Washer, Lock	5
7	A070-00006-100	Handle Sleeve	1
8	A090-00001-000	Cover Plate	1
9	5110-06010-000	Screw	4
10	A070-00001-000	Wheel	2
11	5308-00013-006	Washer	2
12	5304-00013-000	C-clip	2
13	G831-03200-000	Air Motor	1
14	5102-10025-000	Bolt	4
15	5308-00095-000	Copper Gasket	1
16	A220-01000-000	Air Hose Assembly	1
17	A240-02100-000	Air Hose	1
18	A240-02200-000	Lift Control Valve	1
19	A20060-0016	Air Coupler, Male	1
20	A070-30000-000	Release Valve Cable	1
21	A090-12008-000	Release Valve	1
22	5905-00054-000	Oil Seal	1

Item	Part No.	Description	Qty
23	5105-05016-000	Screw	1
24	5102-08025-000	Screw	2
25	5202-00008-000	Nut	2
26	G62S-03301-000	Filler Screw	1
27a	A070-00009-000	Spring (23221C)	4
27b	A091-00002-000	Spring (23222C)	
28	A070-11001-000	Extension Screw	1
29	A070-00007-000	Saddle	1
30	A070-00008-000	Spring Plate	1
31	A27010-0028	Air Filter	1
32	A0901S-077	Repair Kit *(includes #22 & A~F)*	-
33	A27010-0008	Piston, Air Motor #13	1
34	A090-10000-000	Hydraulic Unit (for 23221C only)	1
	A091-10000-000	Hydraulic Unit (for 23222C only)	
35	A070-00003-100	Wheel Axle	2
36	A090-00002-000	Base Plate	1
37	A070-81001-000	Adapter Holder	1
38	A070-00015-000	Adapter, 2-1/2"	1
39	A091-00003-000	Adapter, 5" (for 23222C only)	1
40	N/A	Set Screw	1

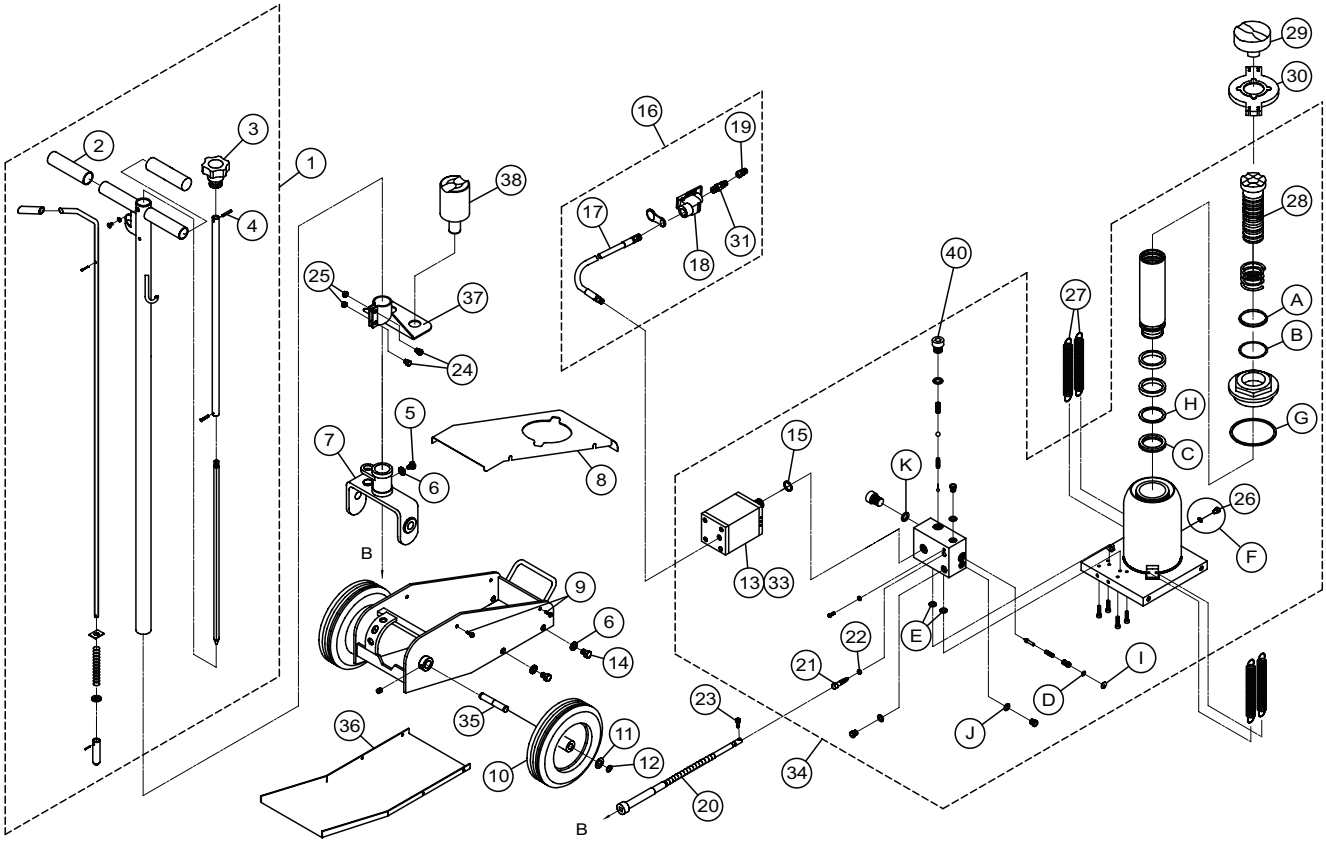

Figure 2 - Replacement Parts Illustration for Model 23221C & 23222C

Replacement Parts for model 23301:

Item	Part No.	Description	Qty
1	A070-70000-100	Handle Assembly	1
2	G251-00007-000	Handle Grip	2
3	G251-40001-000	Knob	1
4	5402-04028-000	Spring Pin	1
5	5102-10017-000	Bolt	1
6	5303-00010-000	Washer, Lock	5
7	A070-00006-100	Handle Sleeve	1
8	A300-00005-100	Cover Plate	1
9	5110-06010-000	Screw	4
10	5102-10016-000	Screw	4
11	A070-00001-000	Wheel	2
12	5308-00013-006	Washer	2
13	5304-00013-000	Retaining Ring	2
14	G831-03200-000	Air Motor	1
15	5308-00095-000	Gasket	1t
16	A220-01000-000	Air Hose Assembly	1
17	A240-02100-000	Air Hose	1
18	A240-02200-000	Lift Control Valve	1

Item	Part No.	Description	Qty
19	A240-02400-000	Air Coupler, Male	1
20	A070-30000-000	Release Valve Cable	1
21	A090-12008-000	Release Valve	1
22	5105-05016-000	Screw	1
23	5105-06020-000	Screw	4
24	5303-00006-000	Lock Washer	4
25	G62S-03301-000	Filler Screw	1
26	A300-00003-000	Spring	2
27	5308-00380-000	Retaining Ring(?)	1
28	B300-10003-000	Saddle	1
29	A300-00004-000	Spring Plate	1
30	A220-01100-000	Air Filter	1
31	A070-00003-100	Wheel Axle	2
32	A090-00002-000	Bottom Plate	1
33	G831-03210-000	Internal Piston, Air Motor	1
34	A300-90009-K03	Hydraulic Unit	1
35	A300-90009-K04	Repair Kit *(includes #22, 26 & a~j)*	-

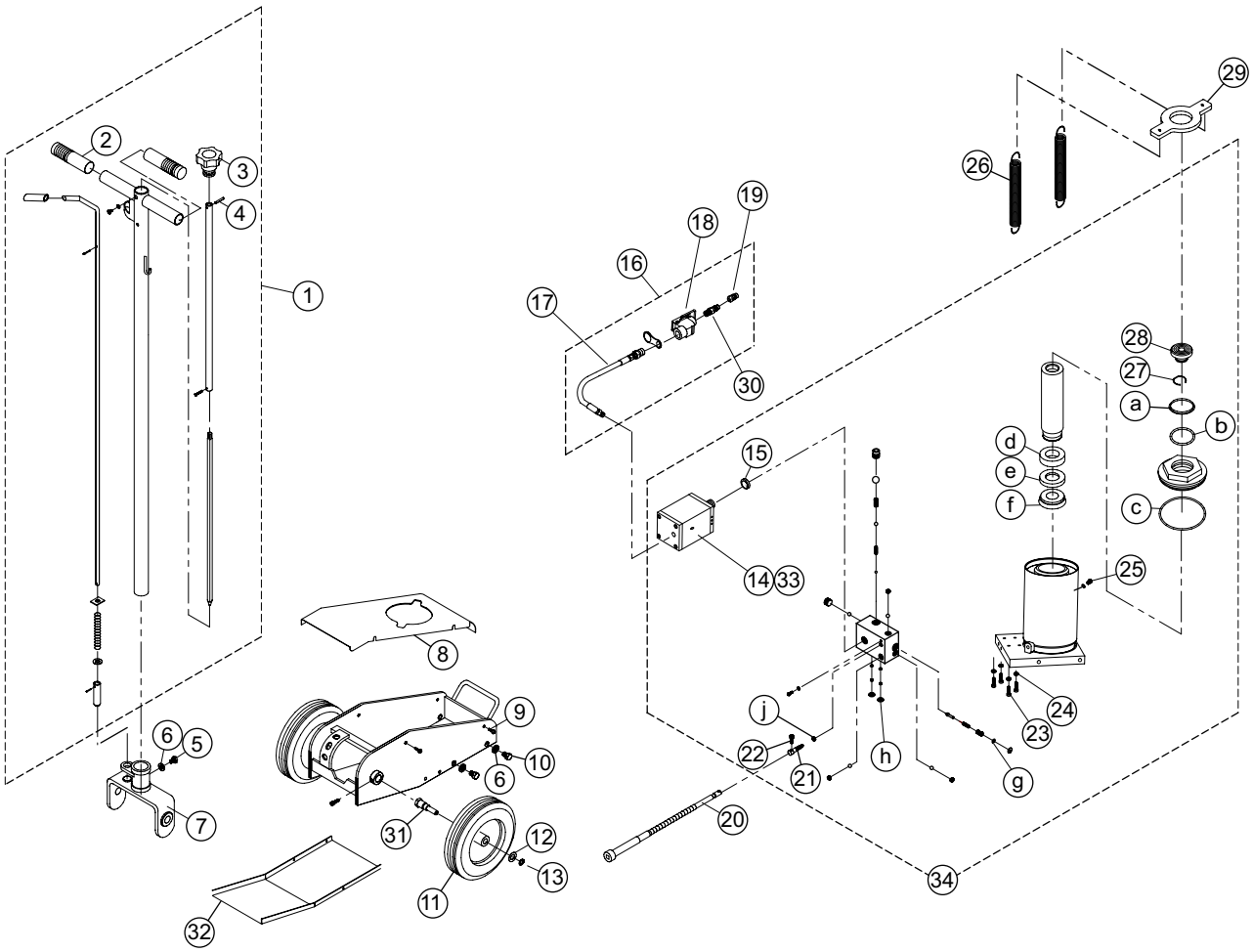

Figure 3 - Replacement Parts & Illustration for Model 23301

ONE YEAR LIMITED WARRANTY

For a period of one (1) year from date of purchase, **SFA COMPANIES, INC.** will repair or replace, at its option, without charge, any of its products which fails due to a defect in material or workmanship under normal usage. This limited warranty is a consumer's exclusive remedy.

Performance of any obligation under this warranty may be obtained by returning the warranted product, freight prepaid, to **SFA COMPANIES, INC.** Warranty Service Department, 10939 N. Pomona Ave., Kansas City, MO 64153.

Except where such limitations and exclusions are specifically prohibited by applicable law, (1) THE CONSUMER'S SOLE AND EXCLUSIVE REMEDY SHALL BE THE REPAIR OR REPLACEMENT OF DEFECTIVE PRODUCTS AS DESCRIBED ABOVE. (2) **SFA COMPANIES, INC.** SHALL NOT BE LIABLE FOR ANY CONSEQUENTIAL OR INCIDENTAL DAMAGE OR LOSS WHATSOEVER. (3) ANY IMPLIED WARRANTIES, INCLUDING WITHOUT LIMITATION THE IMPLIED WARRANTIES OF MERCHANTABILITY AND FITNESS FOR A PARTICULAR PURPOSE, SHALL BE LIMITED TO ONE YEAR, OTHERWISE THE REPAIR, REPLACEMENT OR REFUND AS PROVIDED UNDER THIS EXPRESS LIMITED WARRANTY IS THE EXCLUSIVE REMEDY OF THE CONSUMER, AND IS PROVIDED IN LIEU OF ALL OTHER WARRANTIES, EXPRESS OR IMPLIED. (4) ANY MODIFICATION, ALTERATION, ABUSE, UNAUTHORIZED SERVICE OR ORNAMENTAL DESIGN VOIDS THIS WARRANTY AND IS NOT COVERED BY THIS WARRANTY.

Some states do not allow limitations on how long an implied warranty lasts, so the above limitation may not apply to you. Some states do not allow the exclusion or limitation of incidental or consequential damages, so the above limitation or exclusion may not apply to you. This warranty gives you specific legal rights, and you may also have other rights, which vary from state to state.

SFA Companies
10939 N. Pomona Ave. Kansas City, MO 64153
888-332-6419
sales@omegalift.com